This is a digital copy of a book that was preserved for generations on library shelves before it was carefully scanned by Google as part of a project to make the world's books discoverable online.

It has survived long enough for the copyright to expire and the book to enter the public domain. A public domain book is one that was never subject to copyright or whose legal copyright term has expired. Whether a book is in the public domain may vary country to country. Public domain books are our gateways to the past, representing a wealth of history, culture and knowledge that's often difficult to discover.

Marks, notations and other marginalia present in the original volume will appear in this file - a reminder of this book's long journey from the publisher to a library and finally to you.

Usage guidelines

Google is proud to partner with libraries to digitize public domain materials and make them widely accessible. Public domain books belong to the public and we are merely their custodians. Nevertheless, this work is expensive, so in order to keep providing this resource, we have taken steps to prevent abuse by commercial parties, including placing technical restrictions on automated querying.

We also ask that you:

+ *Make non-commercial use of the files* We designed Google Book Search for use by individuals, and we request that you use these files for personal, non-commercial purposes.
+ *Refrain from automated querying* Do not send automated queries of any sort to Google's system: If you are conducting research on machine translation, optical character recognition or other areas where access to a large amount of text is helpful, please contact us. We encourage the use of public domain materials for these purposes and may be able to help.
+ *Maintain attribution* The Google "watermark" you see on each file is essential for informing people about this project and helping them find additional materials through Google Book Search. Please do not remove it.
+ *Keep it legal* Whatever your use, remember that you are responsible for ensuring that what you are doing is legal. Do not assume that just because we believe a book is in the public domain for users in the United States, that the work is also in the public domain for users in other countries. Whether a book is still in copyright varies from country to country, and we can't offer guidance on whether any specific use of any specific book is allowed. Please do not assume that a book's appearance in Google Book Search means it can be used in any manner anywhere in the world. Copyright infringement liability can be quite severe.

About Google Book Search

Google's mission is to organize the world's information and to make it universally accessible and useful. Google Book Search helps readers discover the world's books while helping authors and publishers reach new audiences. You can search through the full text of this book on the web at `http://books.google.com/`

VGI

Frank

NOV 16 1926

★ H. H. Ketcham '09

—l

Franklin

VG

DYNAMO LABORATORY MANUAL

ADVANCE EDITION

DIRECT CURRENT STUDIES AND TESTS

DYNAMO LABORATORY MANUAL

For Colleges and Technical Schools

BY

WILLIAM SUDDARDS FRANKLIN

PROFESSOR OF PHYSICS IN LEHIGH UNIVERSITY

AND

WILLIAM ESTY

PROFESSOR OF ELECTRICAL ENGINEERING IN LEHIGH UNIVERSITY

WITH THE COOPERATION OF

STANLEY S. SEYFERT AND CLARENCE E. CLEWELL

NEW YORK PUBLIC LIBRARY

SOUTH BETHLEHEM, PA.

FRANKLIN AND ESTY

1906

All rights reserved

THE NEW YORK
PUBLIC LIBRARY
281653A
ASTOR, LENOX AND
TILDEN FOUNDATIONS
R 1926 L

COPYRIGHT, 1906
BY W. S. FRANKLIN AND WILLIAM ESTY

PRESS OF
THE NEW ERA PRINTING COMPANY
LANCASTER, PA.

PREFACE.

This advance edition of our dynamo laboratory manual covers direct-current studies and tests in three sets of experiments. The object of arranging the experiments in sets is to facilitate the use of the manual by students of different grades, that is, by students who devote but a short time to dynamo laboratory work and by students who devote a longer time to this subject.

It is difficult to distinguish sharply between pedagogy and practice in a laboratory manual of this kind. It may therefore not be out of order to state that experiments 1, 2, 3, 5, 6, 7, 14, 20, 25 and 26 are arranged with reference, primarily to their educational value, whereas the remaining experiments are such as are sometimes carried out in practice.

The complete edition of this laboratory manual will include alternating-current studies and tests and it will be ready in June, 1907.

The authors believe, from their long experience, that it is necessary to give complete practical directions, written or oral, for the performance of dynamo laboratory work. Completeness of practical directions has, however, an undoubted evil influence in eliminating almost wholly the incentive to originality on the part of the student, and in order to minimize this evil influence, the authors suggest: (*a*) That students using this manual be thrown almost wholly upon their own resources in the performance of their experimental work, and (*b*) that great stress be laid by the instructor upon that part of the written report which is devoted to a dicussion of results. There is really a wide field for the exercise of the student's imagination in the realization in wood and iron of the details of any set of concise directions, and there is an opportunity for a student to exercise his originality in a dis-

cussion of the practical significance of his experimental results.

There are at present great differences of opinion as to the significance of laboratory work in the school. Some would have the student discover a large part of modern science for themselves; others do not distinguish between experimental research and laboratory pedagogy; and a third group, to which perhaps the authors of this manual belong, exaggerate the pure pedagogical aspects of laboratory work.

The fact is that laboratory work may very properly introduce new materials of study, it should be exacting in the matters of precaution and accuracy, and it should develop manual dexterity and give exercise in the translation of scientific writing into ideas of reality.

THE AUTHORS.

SOUTH BETHLEHEM, PA.,
September, 1906.

TABLE OF CONTENTS.

INTRODUCTION.

General Directions and Precautions.

PART I.

Direct-Current Studies and Tests.

Experiment.
1. Study of a Dynamo 17
2. Motor Starting Rheostats 19
3. Phenomena of Building Up 22
4. Measurement of Resistance 25
5. Direction of Rotation of Generators and Motors 27
6. Voltage of Generators 29
7. Speed of Motors 32
8. Characteristics of a Series Generator 35
9. Characteristics of a Shunt Generator 38
10. Characteristics of a Compound Generator 40
11. Characteristics of a Series Motor 44
12. Characteristics of a Shunt Motor 46
13. Characteristics of Compound Motors 48
14. Magnetizing Action of Armature Current 50
15. Stray Power Test 53
16. Measurement of Insulation Resistance 56

PART II.

Direct-Current Studies and Tests (*Continued*).

Experiment.
17. Regulation of a Shunt Generator 59
18. Test of a Dynamotor 60
19. Test of a Motor-Generator 63
20. Comparison of Shunt and Separate Excitation 65
21. Armature Characteristic 67
22. Commutation Test 69
23. Magnetic Leakage 71
24. Distribution of Flux in Gap Space 74
25. Series Generator Driving Separately Excited Motor 77
26. Series Generator Driving Shunt Motor 80

27. Series Generator Driving Series Motor 82
28. Balance of a Three-wire System 85
29. Feeder Booster 88
30. Differential Battery Booster 90
31. Efficiency by Cradle Dynamometer 93
32. Variation of Compounding by Variation of Shunt Excitation . . 96

PART III.

Direct-current Studies and Tests (*Concluded*).

Experiment.
33. Determination of Field Turns 99
34. No-load and Full-load Magnetization Curves 101
35. Determination of Length of Air Gap 103
36. Magnetization Curve by Torque Observations 106
37. Indirect Study of Motor Characteristics 109
38. Variation of Stray Power Loss with Speed 112
39. Variation of Stray Power Loss with Flux 115
40. Separation of Stray Power Loss Into Its Components 117
41. Operation of Constant-current Arc-Lighting Machine 120
42. Shunt Generators in Parallel 123
43. Compound Generators in Parallel 125
44. Pump-back Test of Generator 128, 131
45. Pump-back Test of Motor 128, 134
46. Pump-back Test of Street-car Motor 137
47. Heat Run 141
48. Electric Railway and Car Test 144

DYNAMO LABORATORY MANUAL.

INTRODUCTION. *

1. General precaution. — Any set of electrical apparatus which is to be arranged for experimental work should be connected to the supply mains through a double-pole switch which is provided with fuses. When everything is properly arranged all of the connections should be traced to be sure that they are correct; one must be certain that the closing of the switch will not endanger any of the measuring instruments. Then the switch should be quickly closed and opened to see if there is any indication of short-circuit. If everything seems to be right the switch may be closed and the work may proceed; but it is of the utmost importance to keep a sharp lookout for trouble during the early stages of the work, such as over-heating of coils and rheostats and the heating of journals.

2. Ammeters. — An ammeter is to be connected in the circuit in which the current to be measured flows. Before connecting the source of supply of current be sure that an excessive current will not flow through the ammeter when the connections to the source of supply are made. If the actual conditions as they exist in the circuit do not enable you to know approximately what the current will be, connect a suitable rheostat in circuit with the ammeter and cut this rheostat out cautiously after final connections to the source of supply of current have been made.

Ammeters are most frequently damaged by being thoughtlessly connected between supply mains with little or no resistance in series with them.

* A group of men who are beginning a course in the dynamo laboratory should be required to study this introduction and recite the substance of it in the class room.

An ammeter should always be provided with a short-circuiting switch as shown in Fig. 1, in which *tt* are the terminals of the

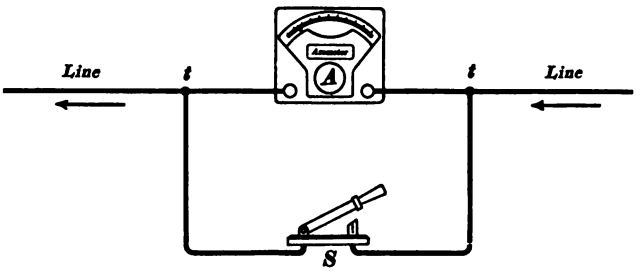

Fig. 1.

ammeter, *A*, and *S* is a single-pole single-throw switch. This switch is to be open only while an ammeter reading is being taken. It is especially important that an ammeter, which is in circuit with a motor, be short-circuited while the motor is being started, on account of the excessively large current which flows through a motor at starting.

Always record identification number of ammeter, and always read and record its zero reading.

In every case a *suitable* ammeter should be used. A suitable ammeter is one which will give nearly its full deflection for the current which is to be measured. Never use an ammeter for measuring a current less than, say, one-third of its maximum reading, if it is possible to get an instrument suited to the current to be measused.

Any alternating-current ammeter may be used for measuring direct currents, but some direct-current ammeters cannot be used for measuring alternating currents.

No ammeter is to be depended upon to give accurate values of current. Whenever a student uses an ammeter in any experimental work he should look up the calibration curve or correction factor of the instrument, or he should calibrate the instrument either by referring it to one of the laboratory standard ammeters or by means of the voltameter, or by means of a standard cell

and a standard resistance. No report of a laboratory exercise is complete which does not duly consider the question of the accuracy of the measuring instruments used.

Use of millivoltmeters with interchangeable shunts as ammeters. —The current, I, flowing in a circuit may be determined by measuring with a millivoltmeter the voltage drop, RI, across a known resistance, R, connected in the main circuit. In this case the resistance, R, is called a shunt in its relation to the millivoltmeter.

The millivoltmeter scale may be made to read amperes directly, or the millivoltmeter scale may be made to read the value of RI in millivolts, in which case the value of I in amperes may be found by multiplying millivolts by $1000/R$. This second method is preferable inasmuch as it permits of the use of any one of a number of shunts with the same millivoltmeter.

Most laboratories are provided with a series of shunts any one of which may be used with any millivoltmeter. When so used the full deflection of the millivoltmeter corresponds to a current value which is stamped upon the shunt. Thus a shunt stamped with the number 10 causes full deflection, D, of any of the millivoltmeters when 10 amperes flows through the shunt, and if the millivoltmeter gives a deflection, d, when connected to this shunt, the current flowing through the shunt is $10 \times d/D$ amperes.

Each shunt has two sets of terminals. The current leads are to be connected to one set of terminals and the millivoltmeter leads are to be connected to the other set of terminals. *Never connect current leads and millivoltmeter leads to the same set of terminals.*

3. Voltmeters. — A voltmeter is to be connected to the points between which the voltage is to be measured.

Voltmeters are frequently made with several sets of terminals so that full deflection may be obtained, say, for 3 volts or for 150 volts. *Under no circumstances should the low voltage terminals of an instrument be connected to a high voltage source.*

A voltmeter may be marked as a 150-volt instrument *with the understanding that the instrument is to be used in series with a multiplying coil.* Such an instrument would be ruined by connecting it directly to 110-volt mains, without including the multiplying coil.

A voltmeter is damaged by a voltage greatly in excess of what the instrument is intended to measure. Therefore, when a low-reading voltmeter (3-volt, 5-volt. or 15-volt) is used for taking readings in a network supplied from a high-voltage source (110 volts, for example), make sure that the instrument is safe before connecting the network to the source of supply. The case in which low-reading voltmeters are most frequently damaged is in the performance of the ammeter-voltmeter method for measuring resistances as explained later.

A voltmeter should always be provided with a circuit-breaking key which is closed only while the instrument is being read.

Always record identification number of voltmeter, and always read and record its zero reading.

In every case a *suitable* voltmeter should be used. A suitable voltmeter is one which will give nearly its full deflection for the voltage which is to be measured. Never use a voltmeter for reading a voltage less than, say, one-third of its maximum reading, if it is possible to get an instrument suited to the voltage to be measured.

Any alternating-current voltmeter may be used for measuring direct or steady voltages, but some direct-current voltmeters cannot be used for measuring alternating voltages.

No voltmeter is to be depended upon to give accurate values of voltage. Whenever a student uses a voltmeter in any experimental work he should look up the calibration curve or correction factor of the instrument, or he should calibrate the instrument by referring it to one of the laboratory standard voltmeters, or by means of the potentiometer and the standard Clark cell.

The range of a voltmeter may be increased by the use of a multiplier, which consists of a resistance placed in series with the instrument.

Voltage control. — Motors are generally tested under conditions of constant-voltage supply. Therefore if the supply voltage is too large or if it fluctuates it must be controlled. This may be done of course by adjusting the voltage of the supply generator but usually it must be done by adjusting a rheostat through which the entire current (field current and armature current) supplied to the motor flows. A difficulty is often encountered in this control of voltage in that a very high resistance may be required when the current delivered to the motor is small as at zero load, whereas a small resistance of high current carrying capacity may be required when the motor is loaded. The same controlling rheostat may be used at full load and at zero load by connecting a suitable auxiliary rheostat, for example, a lamp bank, across the motor terminals at zero load, care being taken however not to have the current that flows through this auxiliary rheostat flow through the ammeter which is used to measure the current which is delivered to the motor as a whole or to measure the current which is delivered to the motor armature as the case may be.

4. Wattmeters. — Wattmeters are used for measuring the power delivered to an electric circuit. In case of direct-current circuits power may be measured by means of an ammeter and a voltmeter, the power delivered to a receiving circuit being in this case the product of the voltmeter and ammeter readings. In case of alternating-current circuits, however, power cannot be measured in this way, owing to the phase difference that may exist between the current and the electromotive force. A wattmeter is employed in such a case.

A wattmeter has two coils, a current coil and a voltage coil, each having its own terminals. The current coil is made of coarse wire and it is intended to carry all, or a definite fraction, of the current that is delivered to the receiving circuit. The voltage or pressure coil is of fine wire having a high resistance, and is intended to carry a very small amount of current which is directly proportional to the electromotive force across the receiv-

ing circuit, the power input to which it is to be measured. The current coil of a wattmeter is treated in all respects as if that part of the instrument were an ammeter, while the pressure coil is treated as if that part of the instrument were a voltmeter. The precautions necessary in the use of ammeters and voltmeters also apply to wattmeters.

Fig. 2 shows the scheme of connections of a wattmeter, without showing the internal arrangement of the instrument. The terminals of the current coil are shown by the two black circles,

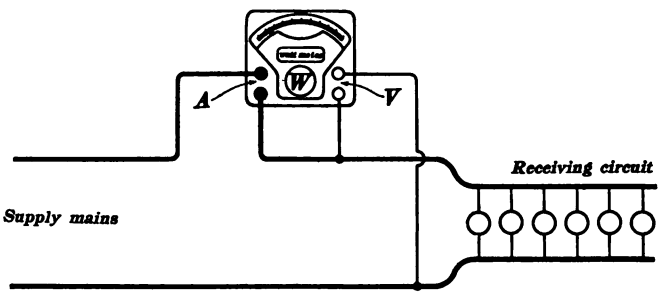

Fig. 2.

A, and the terminals of the voltage coil are shown by the two light circles, *V*.

A wattmeter may have its range increased, either by shunting its current coil so as to cause only a fraction of the current to flow through it, or by placing a resistance in series with its pressure coil; or both methods of increasing the range of the instrument may be used at the same time.

5. Errors of instruments. — *Errors due to stray field.* Magnetic fields due to magnets or circuits external to an ammeter, voltmeter or wattmeter, may produce an appreciable effect upon the deflection of the instrument; even an alternating-current instrument may be greatly affected, especially if it is near a coil of wire which is connected to the same source of alternating current.

Errors due to stray field may be detected by reading the instrument, turning it about a vertical axis into a new position, and reading again. These errors may be eliminated by taking the

mean of the two readings obtained when the instrument is placed successively in two positions between which there is an angular displacement (of instrument) of 180°. If the instrument gives readings for currents in both directions then errors due to stray field may be eliminated by reading the instrument, then reversing the current in the instrument (leaving all external conditions unchanged) reading again, and taking the mean of these two readings.

Errors due to inaccurate leveling. — No instrument has the center of mass of its moving element exactly in the axis of suspension and consequently the deflection of the instrument is more or less affected by gravity unless the axis of suspension is vertical. When an instrument is used it should be in the same position relative to gravity as it was when it was calibrated.

Mutual errors of ammeters and voltmeters. — An ammeter, *A*, and a voltmeter, *V*, are connected to measure the current delivered to a receiving circuit, *R*, and the voltage between the terminals of the receiving circuit, respectively, as shown in Figs. 3 and 4.

In Fig. 3 the ammeter reads the sum of the currents in *R* and *V*, and in this case the ammeter should be read when the volt-

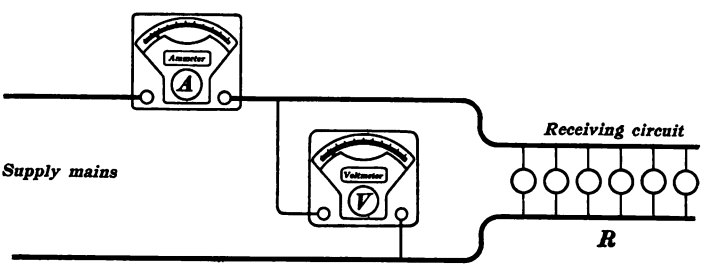

Fig. 3.

meter circuit is open, otherwise the current flowing through the voltmeter should be subtracted from the ammeter reading.

In Fig. 4 the voltmeter reads the sum of the voltages acting on *A* and *R*, and in this case the voltmeter should be read when the ammeter is short-circuited, otherwise the voltage between the ammeter terminals should be subtracted from the voltmeter reading.

The arrangement shown in Fig. 3 is usually preferable to that shown in Fig. 4, because the resistance of a voltmeter is usually known and therefore the current flowing through the voltmeter

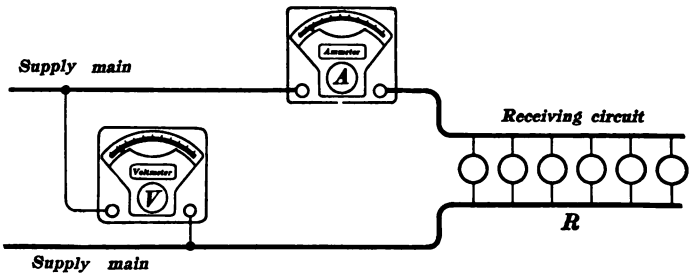

Fig. 4.

may be easily calculated from the voltmeter reading. On the other hand, the resistance of an ammeter is not usually known and, being very small, it is not easily measured and therefore the data required for calculating the voltage between the terminals of an ammeter are not usually available.

When no allowance is to be made for mutual errors, the connection shown in Fig. 3 should be used when the current is relatively large, and the connection shown in Fig. 4 should be used when the current is relatively small.

6. Measurement of speed. — Almost all generator and motor tests depend upon a knowledge of speed, or require constant speed, but unfortunately, speed is nearly always variable and its determination tedious.

The speed of a generator or motor under test should be repeatedly determined during the progress of the test, in fact, the speed should be observed every time a set of readings of current, voltage, etc., is taken.

In the determination of speed by means of the ordinary revolution counter it is necessary to exercise deliberate care in starting and stopping a count of the number of revolutions in a minute, so that the interval over which the count is made may really be a minute. With care the error in time may be less than one fifth

of a second, while an ordinary careless observation often involves a time error of several seconds.

The best procedure, with watch and revolution counter, is as follows: One observer sets the dial of the counter and makes ready to start the counter on signal. Another observer looks at his watch and when the second hand of the watch is at 50 seconds he says: "*get ready*," then exactly at 59 seconds he says "*ready*," and exactly at 60 seconds he says "*now*," each signal being spoken as sharply and quickly as possible. The same series of signals is used at the end of the count. The observer who manipulates the counter should respond to the signals with the utmost promptness. A speed cannot be determined satisfactorily with the watch and revolution counter by a single observer.

It is a great convenience to arrange a bell (a sound signal is necessary inasmuch as one has to keep his eyes upon his revolution counter) and a clock so that signals one minute apart can be obtained by closing a switch. These signals should each be preceded by a warning signal, which should come about one second before the signal to be used.

In the testing of a very small motor, such as a fan motor, the speed counter cannot be used in the ordinary way on account of the fact that the application of a speed counter to the motor loads the motor very appreciably. The speed of a small motor is best determined as follows: A speed counter is connected permanently to a small auxiliary motor which is provided with a rheostat and a brake (the fingers will serve for the brake) for controlling its speed. This auxiliary motor carries on one end of its spindle a thin metal disk with a narrow slot in its edge, it is placed so that one can look through the slot in the edge of the disk and see the armature or pulley of the motor which is being tested, and the speed of the auxiliary motor is adjusted to, and kept at, the exact speed of the motor which is being tested. A distinct chalk mark should be made upon the armature or pulley of the motor which is being tested and this

mark will appear stationary as viewed through the slot when both motors are running at the same speed (in fact when the ratio of the speeds is any rational fraction). One can usually tell from the appearance and especially from the sound of the two machines when their speeds are approximately equal.

7. The magneto speed-indicator. Mechanical tachometers. — A very convenient and accurate way of measuring speed is to employ a small magneto-generator, belted, or better, directly connected, to the dynamo shaft. A voltmeter connected across the armature terminals of the magneto-generator will then indicate a voltage directly proportional to the speed. One reading of speed must be taken with the speed counter in order to determine the constant of the instrument. This apparatus is especially convenient when a speed is to be kept constant. Mechanical tachometers, though very convenient are unreliable.

8. Speed control. — A machine which is to be tested under constant speed may best be driven by a shunt motor. The speed of such a motor may be changed at will by adjusting its field rheostat so that the machine to be tested may be brought to proper speed before each set of readings of current, voltage, watts, etc., is made. In some cases it is possible by calculation to reduce a series of readings of current, voltage, etc., at various observed speeds to what these readings would have been at a constant normal speed. When the arithmetical labor involved in such reductions is less than the labor involved in the careful control of the speed, the speed is allowed to vary more or less during the test, and the speed corresponding to each set of readings of current, voltage, etc., is observed. Speed control is scarcely feasible without the use of a magneto-speed indicator or a mechanical tachometer.

9. Rheostats. — A rheostat is a conveniently arranged portion of an electrical circuit having an adjustable resistance. In every case in this work it is understood that a *suitable* rheostat is to be used. A suitable rheostat is one which will carry the required

current without overheating, and one which has sufficient resistance to limit the current to the desired value under the conditions in which the rheostat is used.

Some rheostats, such as water rhoestats, for example, can scarcely be damaged by excessive current. The resistance of a water rheostat may be adjusted by moving the electrodes or by changing the concentration of the salt solution used. Very high resistance may be obtained by using nearly pure water and the resistance may be reduced to a comparatively low value by adding salt slowly and stirring vigorously.

Field rheostats, such as the enamel rheostats which are provided in many laboratories, are easily damaged by excessive current. *Such rheostats must always be in series with a very considerable fixed resistance* such as a glow lamp or a high resistance field coil.

Lamp banks form convenient rheostats. The number of lamps required in a lamp bank for use as a rheostat for any given case may be estimated on the basis that a 110-volt, 16-candle-power carbon filament lamp takes ½ ampere, a 110-volt, 32-candle-power lamp takes 1 ampere, etc. In using a lamp bank the lamps should not be subjected to more than their rated voltage, 55 volts, 110 volts, or 220 volts as the case may be. A lamp bank is not suitable for a low resistance rheostat, thus two hundred and twenty 16-candle-power, 110-volt lamps in parallel would be required to give a resistance of one ohm. The resistance of a lamp bank changes by steps when lamps are connected and disconnected. Therefore a lamp bank is not suitable where fine adjustments are to be made.

Rheostats made of strips of tinned sheet iron have a large current carrying capacity and are very satisfactory. Their chief defect is that they are subject to quick changes of temperature especially in a room where there is the least draft of air, and these quick changes of temperature cause changes of resistance and produce fluctuations of current.

Anything, rheostat, lamp bank, or motor, which receives the

output of an electric generator is called a receiving circuit. In all diagrams in this manual a receiving circuit is represented as a bank of lamps, although in most cases an ordinary metal or water rheostat is used.

10. Switches, fuses, and circuit breakers. — Whenever a field winding or other portion of a circuit is to have its connections changed repeatedly from one source of supply to another, a double-pole, double-throw switch should be used.

The most satisfactory reversing switch is a cross-connected, double-pole, double-throw switch. Never use the variety of reversing switch known as the Pohl switch in the dynamo laboratory. This switch nearly always produces a momentary short-circuit when it is operated.

Always open or close a switch suddenly so as to avoid fusing of the contact points.

In setting up the apparatus for an experiment, care must always be taken to see that the circuit is properly protected by fuses (cut-outs) or, if the power consumed is large, by a circuit breaker.

When replacing a fuse link in a cut-out, disconnect the supply circuit. Serious burns frequently result from careless use of a screw driver on a cut-out which is not disconnected from the supply mains.

When the circuit-breaker on the main generator breaks the supply circuit, always open the main switch before closing the circuit breaker, and close the main switch again afterwards. If the circuit breaker is closed without opening the main switch disaster may follow if the short-circuit is still on the line.

11. Dynamos. — When a generator or motor is assigned for test the first thing to do is to inspect it carefully so as to identify its parts and especially to identify its armature terminals and field terminals.

A specification of rated speed, rated voltage and rated full-load current is usually to be found on the name plate. These specifications must be considered before suitable ammeters, volt-

meters, etc., can be selected for the test. It is convenient to remember that the field current of a shunt dynamo is about 8 per cent. of the rated armature current in a machine of 1 horse-power size, falling to 3 per cent. of the rated armature current in a large machine.

When arrangements are completed for beginning a test, inspect the bearings of the armature shaft and see that they are properly oiled.

The commutator should be clean and smooth. The ends of the brushes should rest with their end faces pressed flatly against the commutator so as to make contact over the whole of the bearing surface.

In case of two-pole machines the brush-sets should be 180° apart. In case of four-pole machines the brush-sets should be 90° apart. Brushes should be carefully placed at the neutral points.

A shunt generator should always be started with the entire resistance of the field rheostat in circuit so that the voltage of the machine may not run up to an excessive value. After the machine is running at full speed the voltage is to be adjusted to the desired value by slowly reducing the resistance of the field rheostat.

A generator is loaded by connecting it to a receiving circuit. This receiving circuit may be a motor, and the mechanical power developed by the motor may be used to help drive the generator.

A motor must have considerable resistance in series with its armature (*and, in case of a shunt motor, not in series with its field winding*) when the machine is connected to the supply mains. As the machine starts up this resistance may be cut out; it should always be cut out slowly.

This resistance constitutes the essential feature of what is called a starting rheostat or starting box. The shunt motor is frequently used for driving other machines under test and the student should be familiar with the arrangement and manipulation of the shunt motor starting box. Therefore the study of the shunt motor

starting rheostat should be one of the first experiments assigned.

The field rheostat of a shunt motor is used for controlling the speed of the motor. This field rheostat should be all cut out when the motor is started, that is, the resistance of the field circuit of the motor should be a minimum at starting.

A series motor must always be provided with considerable belt or brake load before the motor is connected to supply mains (through a starting rheostat of course). Otherwise the machine may run so fast as to damage or destroy its armature.

When starting any motor for the first time one should be ready to disconnect it from the supply mains without delay in case the motor fails to speed up properly, in case it runs dangerously fast, in case the motor appears to take excessive current, or in case the sparking at the brushes is excessive.

A motor may be loaded by a brake, by belting it to any machine, or by belting it to a generator. When the motor drives a generator the electrical output of the generator may be used to help supply the motor with current.

12. Preparation for work. — The student should study carefully the experiment to be performed before beginning any of the experimental work. If no diagram of connections is provided, one should be carefully made and verified before trying to connect up any of the apparatus. Diagrams should be drawn with some regard to symmetry and with little or no regard to the location of the several parts of the apparatus.

Nothing is of greater importance in connection with a piece of experimental work than forethought. It counts more than anything else in the saving of time, in the prevention of trouble, and in the assurance it gives of satisfactory results. Forethought should be brought to bear upon every phase of the work in hand. The measuring instruments should be suited to the magnitude of voltage and current to be measured, the order of taking observations should be carefully planned, the observations should be recorded in complete detail in a carefully prearranged form, and

a sufficiently complete description of every piece of apparatus used should be recorded for the purpose of identification. In all cases duplicate observations are required.

Tabular forms are given for many of the experiments in this manual and when tabular forms are not given the students should plan a suitable form in which to record his observations, and, in some cases, to enter the results of his calculations.

It is desirable that the actual original record of observations (not a copy) be submitted with the report.

13. The written report. — The written report of an experiment should call forth from the student his best effort. The report should be neat in workmanship and systematic to the last detail. Drawings and diagrams should not be merely freehand sketches but carefully drawn figures. All derived results should be neatly tabulated.

The report should contain the following :

1. A clear and concise statement of the object of the experiment.
2. A brief discussion of the theory involved in the experiment.
3. A description of all apparatus used, with sketches and diagram of connections.
4. All original observations in neatly tabulated form. (Not a copy.)
5. Calculations and deduced results.
6. Curves plotted from observations.
7. Conclusions.

In plotting results in the form of a curve, care should be used in choosing the scale of ordinates and abscissas, so that the location of any point may be easily read. The scales should be so chosen that the curve may cover nearly the whole sheet, both as to ordinates and abscissas. Points on the curve should be marked by small crosses or by points surrounded by small circles. After the points are all plotted on the sheet the best representative curve is drawn, that is, a smooth curve is drawn with the points

equally distributed on either side. If a smooth curve can be drawn including all points, it should, of course, be so drawn. All curves should be drawn in ink on the best cross-section paper, and each sheet of curves should be made self-explanatory by appropriate title and careful labeling.

PART I.

DIRECT-CURRENT STUDIES AND TESTS.

Experiment 1.

STUDY OF A DYNAMO.

The object of this experiment is to familiarize the student with the structural details of a dynamo and to give practice in observing and recognizing different types of machines.

Type. — Dynamos may be grouped in two classes, namely, constant-voltage machines and constant-current machines.

Field magnets. Field magnets may be bipolar or multipolar. There is a so-called unipolar type of dynamo which is seldom met with in practice. Two field magnets having the same number of poles may differ in the number of magnetic circuits they provide.

Field excitation. — The field winding of a dynamo may be connected shunt, series, or compound.

Field coils. — Field coils, as to their construction, may be wound on bobbins or they may be form-wound. In the latter case the coils are held together by rope or tape.

Field poles. — Field poles may be solid or laminated. Sometimes separate pole-pieces are used. Sometimes the ends of the field cores, widened more or less by field-shoes, serve as pole-pieces.

Armature core. — The armature core may be smooth or slotted, and the stampings may be assembled directly on the shaft or on a " spider " which is keyed to the shaft.

Armature winding. — The two most important types of armature winding are the ring or helical winding and the drum winding. The drum winding may be arranged as a lap winding or as a wave winding. The ring or helical winding can be

arranged to correspond to either lap or wave, but it is in fact nearly always arranged in a manner which corresponds to the lap winding.

Armature leads. — The leads are connected either directly to the commutator bars, or to risers connected thereto.

Bearings. — As to lubrication, bearings may be either of the oil-cup type, or they may be ring-oiling. They may or may not be self-aligning.

Work to be done. — Make a report on an assigned generator and an assigned motor, as follows:

1. Type of machine .....
2. Rating of machine .....
   (*a*) Normal voltage .....
   (*b*) Normal current .....
   (*c*) Kilowatts (if generator) .....
   Horse power (if motor) .....
   (*d*) Speed in revolutions per min. .....
3. Field magnets .....
4. Field excitation .....
5. Field coils .....
6. Field poles .....
7. Type of armature .....
8. Armature core .....
9. Type of armature winding .....
10. Peripheral speed of armature and of commutator .....
11. Connection of armature leads .....
12. Number of brush sets and number of brushes per set; current density at brush contacts.
13. Sketch the outline of the machine, showing the location of the terminals of the various coils.
14. Make a sketch of the proper electrical connections of each machine, naming the various parts.

Experiment 2.

MOTOR STARTING RHEOSTATS.

The object of this experiment is to familiarize the student with the arrangement and operation of the various types of rheostats that are used for starting shunt motors.

Theory. — Let E_x be the voltage between the supply mains, and R the total resistance in the armature circuit of the motor including the starting rheostat. The total electromotive force induced in the motor armature by rotation is $\Phi Z'n$.* This is commonly called the counter electromotive force of the motor. The net voltage available for overcoming the resistance of the armature circuit is $E_x - \Phi Z'n$, so that the current which flows through the armature will be :

$$I = \frac{E_x - \Phi Z'n}{R}$$

Under ordinary running conditions, even when the motor is loaded, the counter electromotive force, $\Phi Z'n$, is nearly equal to E_x, and, even though R be small, the current will not be excessive. At starting however, the speed, n, is zero and the counter electromotive force is zero so that the current, which is then equal to E_x/R, will be excessively large unless R is large. The starting rheostat serves to make R large at starting and thus keep the starting current down to a reasonably low value.

The starting rheostat is intended to interpose resistance in the armature circuit at starting but never in the field circuit of a shunt motor. The field winding is always connected to the supply mains independently of the armature circuit. This is important because it is an advantage to have the greatest possible amount of field flux at the moment of starting in order to give a large starting torque.

Failure of a motor to start when a fair amount of current is allowed to flow through the armature is generally due to weak-

* See theoretical discussion of Experiment 6.

ness of the field magnet which in turn is due to smallness of field current.

The simplest arrangement of the shunt motor starting rheostat is shown in Fig. 5. The starting box has three terminals marked

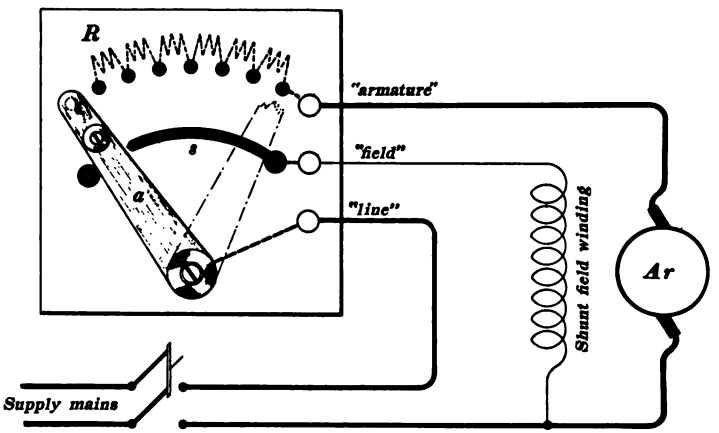

Fig. 5.

"line," "field," and "armature," respectively. The terminal marked "line" is connected to one of the supply mains, the terminal marked "field" is connected to one terminal of the field winding, the terminal marked "armature" is connected to one terminal of the motor armature, *Ar.*, and the remaining terminals of field and armature are connected to the other supply main. To start the motor the supply switch is closed and the rheostat arm is slowly moved in the direction of the arrow. The first movement of the arm makes contact with the sector, *s*, and connects the field winding to the supply mains. Then the armature, *Ar.*, is connected through the resistance, *R*, which is slowly cut out as the motor speeds up.

Approved forms of motor-starting rheostats have automatic devices for throwing the rheostat arm back to the starting position either when the motor is over-loaded or when the supply current fails. There are many different designs of shunt motor starting rheostats in use the details of one of which are shown

in Fig. 6. Connections inside of the starting box are shown by dotted lines. Connections outside of the box are exactly like the connections shown in Fig. 5. The small electromagnet, *f*, has its winding in circuit with the field winding of the motor. This small magnet holds the rheostat arm in the running position;

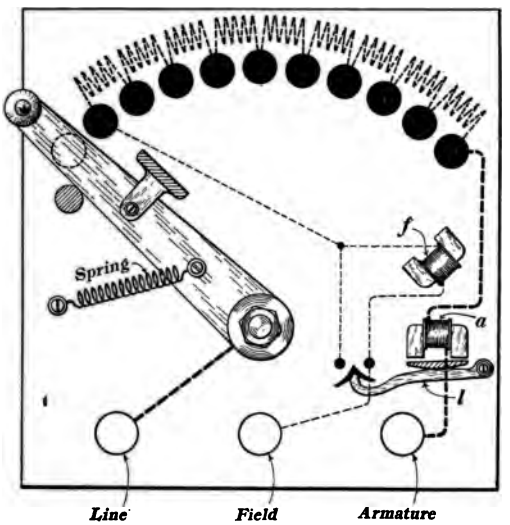

Fig. 6.

but releases it when the field current ceases to flow, when the spring pulls the rheostat arm to the starting position. The small electromagnet, *a*, has its winding in circuit with the motor armature, and when the motor is overloaded the excessive armature current causes the magnet, *a*, to lift the lever *l*, the lever operates a device which short-circuits the winding of *f*, and *f* releases the arm as before.

Work to be done. — 1. Sketch the connections of a starting rheostat which is provided with a *no-voltage release*, and also the connections of a rheostat which is provided with an *over-load release*.

2. Determine whether the shunt-field current actuates the controlling magnet in all the starting rheostats which are available for study.

3. Properly connect up the assigned shunt motor with its starting box, placing an ammeter so as to measure the total current input to the motor. See that the motor starts properly.

4. Note the maximum deflection of the ammeter as the rheostat handle is moved to each successive contact stud. Repeat, moving the rheostat arm or handle over two contact studs at a time.

5. Take the same readings with motor loaded by applying a brake to the pulley.

6. Note the action of the rheostat handle when the supply switch is opened.

Caution. — If the motor fails to start after the rheostat handle has passed the first few contact studs, do not move the handle farther; the failure to start may be due to a faulty connection. The handle of the starting-box must never be moved too rapidly; to do so defeats the purpose of the starting-box. The motor must not be allowed to run for any length of time with the starting resistance wholly or partly in the circuit; to do so is apt to overheat the resistance coils in the rheostat.

Report. — 1. Discuss the function of the starting rheostat.

2. Explain any differences found in the manner of exciting the controlling magnets of the *no-voltage release*.

3. Explain the sketches made.

4. Explain the phenomena observed in 4, 5 and 6 above.

Experiment 3.

PHENOMENA OF BUILDING UP OF A GENERATOR.

Theory. — A generator which has been in operation usually retains a small portion of its field magnetism which is called its residual magnetism. The rotation of the armature in the weak field due to the residual magnetism induces a small electromotive force in the armature windings which causes a small current to flow through the field coils, thus strengthening the residual mag- n if the current flows in the right direction. If the small

initial current flows through the field coils in the wrong direction the residual magnetism is weakened and the machine cannot build up. The absolute direction of the residual magnetism has, however, nothing to do with the building up of a machine, as will be shown in the following experiment.

To build up, a machine must have residual magnetism. Residual magnetism is indicated in the following experiment by the deflection of a voltmeter connected across the armature terminals, the machine being driven at normal speed with its field circuit open.

To build up when driven in a given direction, a machine must have its field winding properly connected to its armature terminals. Improper field connections cause the induced current to weaken the residual magnetism, as indicated in the following experiment by a reduction of the deflection of the above-mentioned voltmeter when the field circuit is closed.

Conditions which may prevent the building up of a generator are : loose connections in the field circuit, excessive resistance in the field circuit, insufficient brush pressure, or insufficient speed of rotation. The most favorable condition for the building up of a *shunt generator* is at zero load (very high resistance receiving circuit), with no resistance in the field circuit. The most favorable condition for the building up of a *series generator* exists when the resistance of the external receiving circuit is low, that is when the machine is loaded.

Apparatus and its arrangement. — Choose a compound-wound dynamo so that the series field coil may be used for supplying a considerable amount of field flux, which is to answer the purpose of residual magnetism. Connect this series or auxiliary field coil through a reversing switch and a suitable rheostat (preferably a lamp-bank if the machine is small) to direct-current mains. The magnetic flux produced by this auxiliary coil is completely under control and it constitutes a fictitious residual magnetism which may be reversed at will. Furthermore, this fictitious residual magnetism is large and the phenomena dependent upon it are

much more easily observed than the similar phenomena due to a much smaller amount of real residual magnetism.

Connect the terminals of the shunt field winding through a reversing switch to the armature terminals of the machine, and connect a suitable voltmeter (preferably one which indicates both positive and negative values of voltage) to the armature terminals.

Arrange to drive the dynamo by means of a motor the field current of which is controlled by a reversing switch so that the direction of driving may be reversed at will. Caution: Do not reverse the field of a motor while the motor armature is connected to supply mains.

Work to be done. — 1. Observe voltmeter reading due to residual magnetism alone, then observe voltmeter readings for both positions (labeling these positions arbitrarily A and B) of the switch which reverses armature-field connections.

2. Repeat these observations with the residual magnetism reversed. During all these observations the dynamo is to be driven steadily in one direction, say clockwise.

3. Reverse the direction of driving and repeat observations required in 1 and 2. To reverse motor, break armature circuit, reverse field current and then start the motor with the usual precautions.

Tabulate the data as follows:

CLOCKWISE DRIVING.

	Voltmeter Readings (Residual Magnetism Positive.)	Voltmeter Readings (Residual Magnetism Negative.)
Armature-field switch open	.....	.....
Armature-field switch, A position	.....	.....
Armature-field switch, B position	.....	....

COUNTER-CLOCKWISE DRIVING.

	Voltmeter Readings (Residual Magnetism Positive.)	Voltmeter Readings (Residual Magnetism Negative.)
Armature-field switch open	.....	.....
Armature-field switch, A position	.....	.....
Armature-field switch, B position	.....	.....

Be sure to indicate whether voltmeter readings are positive or gative.

In the report discuss these observations as illustrating the phenomena of building up.

Experiment 4.

MEASUREMENT OF RESISTANCE.

Resistances of rather high value are most conveniently measured by means of a portable "testing set" consisting of a Wheatstone's bridge, resistance box, and sensitive galvanometer. Such a testing set may be satisfactorily used for measuring the resistance of the shunt field winding of a dynamo. The ordinary Wheatstone's bridge cannot, however, be used satisfactorily for measuring the very low resistances of armatures and series field windings.

By *armature resistance* is usually meant the resistance of the armature winding plus the resistance of the brushes, brush concontacts and armature leads. In general, by the resistance of a particular coil of a machine is meant the resistance of all wires and connections included within the terminals of that coil.

Methods. — There are two fairly accurate shop methods for measuring low resistances; one requires the use of an ammeter and a voltmeter, and the other requires a voltmeter only. Good commercial instruments of fair accuracy are sufficient for taking the readings.

Ammeter-voltmeter method. — The armature or other coil, the resistance of which is to be determined, is connected in series with an ammeter and a suitable rheostat, the object of which is to limit the current to a safe value. Simultaneous readings are taken of the current, and of the voltage across the terminals of the resistance to be measured. The resistance may then be easily calculated from the data thus obtained, by applying Ohm's law.

It is important to select an ammeter and a voltmeter suitable to the current and voltage to be measured, so as to secure the greatest possible accuracy in the result. At least three sets of readings should be taken, using different values of current, and the average result of the three sets may be taken as the final result.*

* In fact, the result obtained from the full deflection of the voltmeter and the full

Voltmeter method. — A known resistance, having a current carrying capacity equal to or greater than the coil whose resistance is to be measured, is connected in series with the coil and with a suitable rheostat for controlling the current, and the whole is connected to supply mains. The voltage across the known resistance and the voltage across the resistance to be measured are observed by means of a voltmeter, the current being kept constant. Then the resistances are to each other as the observed voltages.

Work to be done. — 1. Connect the armature of the assigned machine according to the diagram shown in Fig. 7. This diagram applies to the ammeter-voltmeter method. Make all of

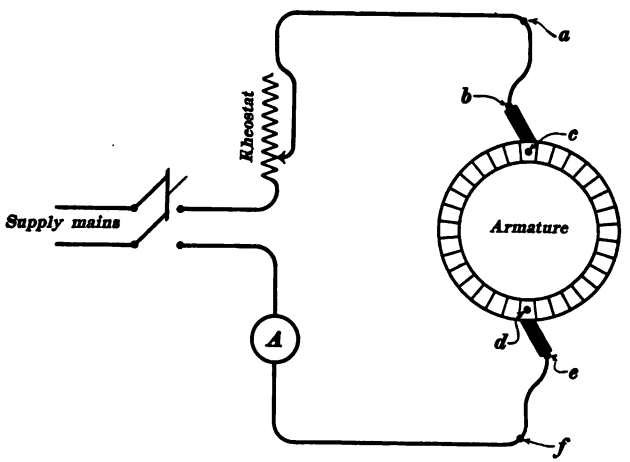

Fig. 7.

the circuit connections independently of the voltmeter connections, and provide the voltmeter with flexible leads which are to be pressed against the proper points only when it is desired to take a voltmeter reading. It is best to terminate the voltmeter leads in sharp metal points fixed in insulating handles so that good contact may be made.

deflection of the ammeter is most reliable and it is not proper to treat this result on a par with the others by taking the simple average of all.

The reason for keeping the voltmeter disconnected except when readings are being taken is that the instrument is likely to be a low-reading instrument and a dangerous voltage is likely to be impressed across its terminals unexpectedly. Thus if the voltmeter terminals are connected across *bc*, *be* or *de*, Fig. 7, the accidental lifting of one of the brushes of the machine might cause the full supply voltage to act on the voltmeter.

For a given observed value of the current, observe the voltages across *af*, *ab*, *ef*, *bc*, *de*, and *cd*, as shown in Fig. 7. Repeat for several different values of current.

2. Measure the total resistance, *af*, Fig. 7, of the same armature by the voltmeter method.

3. Measure the resistance of the series field winding and the resistance of the shunt field winding of the assigned dynamo and also the resistance of the assigned rheostat by either of the above methods or by a portable testing set, using of course a suitable method in each case.

No.	Amp.	Voltages.						Ohms Resistance.						
		af	ab	ef	bc	de	cd	af	ab	ef	bc	de	cd	Total.
1														
2														
3														
4														

Form 4.

Report. — The report should describe all the work done and specify the results obtained. Calculate the resistance of each of the parts for which readings were taken, and properly tabulate these resistances. Compare the resistance of the armature measured as a whole with the result obtained by adding the measured resistances of the several parts, *ab*, *bc*, *cd*, *de*, and *ef*, Fig. 7. Give expression of opinion as to the merits of the two or three methods for measuring resistances used in this experiment.

Experiment 5.

DIRECTION OF ROTATION OF GENERATORS AND MOTORS.

The object of this experiment is three-fold: (1) to determine what effect the direction of rotation has on the building up of generators; (2) to determine the relative direction of rotation of a given dynamo when operated as generator and motor in succession; and (3) to determine the effect on the direction of rotation of motors, of changing the connections of the field and armature terminals.

Theory. — In a generator the conditions permit building up when the electromotive force induced by rotation of the armature in the field due to residual magnetism is in such a direction as to cause the field coils to strengthen the residual magnetism. If this condition exists, it is evident that if the direction of rotation of the armature be reversed the electromotive force induced in the armature will also be reversed and will, under the given conditions, cause current to flow in the field coils in such a direction as to weaken the residual magnetism. This is true of all types of generators.

In motors the direction of the force action of the magnetic field on the armature wires is determined, first, by the direction of the field itself, and second, by the direction of the current in the wires, and the direction of this force action is reversed either by reversing the field current alone, or the armature current alone, but not by reversing both.

Apparatus. — There are required for this experiment a shunt dynamo and a series dynamo. These are to be arranged so that the one or the other can be driven in either direction as a generator, and so that either machine may be operated as a motor. A rheostat will be required to serve as a receiving circuit for the series generator since the series generator cannot build up without a receiving circuit, and starting resistances must be used in operating the machines as motors. A voltmeter may be used for showing when the machines have built up as generators.

Work to be done. — Read carefully the instructions accompanying Experiments 2 and 3 before beginning this experiment.

1. Find the direction of rotation necessary to enable the shunt machine to build up, recording same as *clockwise* or *counter-clockwise*. Compare this with the direction in which the same machine is observed to run as a shunt motor with the *same connections of field to armature.*

2. Repeat (1) with the series machine.

3. Find the effect upon the direction of rotation of both series and shunt motors of:

(*a*) Reversing the field current alone.

(*b*) Reversing the armature current alone.

(*c*) Reversing both armature current and field current.

Precaution. — In running the series machine as a motor apply the current only for an instant, unless some form of mechanical load be provided to prevent the machine from racing.

Report. — 1. (*a*) Explain the theoretical reasons for the phenomena observed in (1), (2), and (3) above; (*b*) illustrate this matter by diagrammatic sketches in which arrows are used to show the directions of the various currents, directions of rotation, etc., involved.

2. From the facts found above: (*a*) Describe the action of a shunt generator used for charging a storage battery when the field of the generator is greatly weakened; and (*b*) describe the action of a series generator when the attempt is made to use it for charging a storage battery.

3. (*a*) Explain the action of a compound generator when it is overpowered by others running in parallel with it, there being no equalizer connection between the machines; (*b*) why is the polarity of the machine reversed after being overpowered? Illustrate by diagram of connections.

Experiment 6.

CONDITIONS AFFECTING THE VOLTAGE OF A GENERATOR.

Theory. — The fundamental equation of the direct current dynamo is

$$E_a = \Phi Z' n \qquad (1)$$

in which E_a is the electromotive force induced in the armature by rotation, Φ is the magnetic flux passing through the armature, Z' a constant depending on the number and arrangement of the armature conductors, and n the speed of the armature in revolutions per second. This equation is true only when the brushes are in the neutral axis. When applied to a generator, this equation determines the electromotive force in terms of the given speed, the armature flux, and the number of armature conductors. It may be seen from this equation that the electromotive force induced in the armature of a generator may be increased by increasing either the amount of the armature flux, Φ, or the speed of rotation, n.

A portion of the induced electromotive force in a generator is used to overcome the resistance of the armature winding. The portion so used is equal to $R_a I_a$, R_a being the resistance of the armature from brush to brush, and I_a the current flowing through the armature. Therefore the voltage, E_s, between the terminals is less than the induced voltage, E_a, by the amount, $R_a I_a$. That is

$$E_s = \Phi Z' n - R_a I_a \qquad (2)$$

The terminal voltage, E_s, of a generator is further reduced by what is called armature reaction. This effect is due to the reduction of the armature flux by the demagnetizing action of the armuture current.

When no means are provided for compensating for armature drop, $R_a I_a$, and for armature reaction, the terminal voltage of a shunt generator or of a separately excited generator falls off considerably with increase of load.

Apparatus. — A shunt generator is to be driven by a shunt motor the speed of which may be easily changed by manipulating a field rheostat. The brush-holders of the generator should be of a design which permits of motion of the brushes forwards and backwards from the neutral axis, and the field poles of the gen-

erator should be of such form as to permit the placing of a block of iron across them.

A voltmeter is connected across the armature terminals of the generator; and the shunt field winding of the generator is so connected, by means of a double-pole, double-throw switch, that it may be easily changed from separate- to self-excitation. A field rheostat should be connected in the field circuit of the generator.

Work to be done. — *1. Effect of lead of brushes.* Adjust the brushes to the neutral axis. This is done by shifting them backwards and forwards until the voltmeter reading is a maximum. Record this maximum voltmeter reading and record the voltmeter reading when the brushes are given a lead of two segments ahead of the neutral axis, and also when they are given a lag of two segments behind the neutral axis. Do this, first, when the machine is separately-excited, and second, when the machine is self-excited.

When this study is finished, adjust the brushes to the neutral axis and clamp the rocker arm.

2. *Effect of change of speed.* — Drive the machine at two different speeds, observing and recording each speed and the corresponding voltmeter reading. Do this, first, when the machine is separately-excited, and second, when the machine is self-excited.

3. *Effect of manipulating field rheostat.* — Drive the machine at constant speed, and observe and record the voltmeter readings for two or more different positions of the field rheostat handle. Do this with both separate- and self-excitation.

4. *Effect of magnetic shunt.* — Drive the machine at constant speed and observe and record voltmeter readings with and without a heavy block of iron laid across the pole pieces. Do this with both separate- and self-excitation. The block of iron should be handled with great care, to prevent it being pulled out of one's hands by the magnetism and thrown against the rotating armature.

5. *Effect of armature reaction and armature drop.* — Arrange a receiving circuit, a bank of lamps or a rheostat, so as to be able

to take approximately full-load current from the machine. Drive the machine at constant speed and observe and record the voltmeter readings for zero-current output and for the full-current output for which the machine is rated. Do this, first, when the machine is separately-excited, and second, when the machine is self-excited, and repeat the observations under the following conditions:

(*a*) When the brushes are in the neutral axis.

(*b*) When the brushes have a forward lead of two segments.

(*c*) When the brushes have a backward lead of two segments.

Tabulate all observations neatly.

Report. — I. Explain the cause of the decrease of voltage observed in (1), when the brushes were shifted from the neutral axis, and explain why this decrease is greater when the machine is self-excited than when the machine is separately-excited.

II. Compare the variation of voltage noted in (1) with the variation under similar conditions of brush position but with the machine loaded, as observed in (5).

III. Explain why the voltage is proportional to the speed of the machine when separately-excited and not when self-excited.

IV. Explain why an increase of field resistance produces a greater falling off of voltage when the machine is self-excited than when it is separately-excited.

V. Note and explain any additional differences between the voltage readings in (1), (2), (3), (4), and (5).

Experiment 7.

CONDITIONS AFFECTING THE SPEED OF A SHUNT MOTOR.

Theory. — A motor, when running, has induced in its armature an electromotive force. This is called the *counter electromotive force* of the motor because it is opposed to the current which flows through the armature. The value of this counter electromotive force, E_a, is given by the same expression that is applied the case of a generator, namely:

$$E_a = \Phi Z' n \tag{1}$$

The current flowing through the armature is given by the equation:

$$I_a = \frac{E_x - \Phi Z' n}{R_a} \tag{2}$$

Solving equation (2) for n, we have:

$$n = \frac{E_x - R_a I_a}{\Phi Z'} \tag{3}$$

When the motor is run at no load the value of I_a is very small, and $R_a I_a$ may be neglected so that equation (3) becomes:

$$n \text{ (zero load)} = \frac{E_x}{\Phi Z'} \tag{4}$$

Apparatus. — Connect the assigned shunt motor, according to Fig. 8. The object of the single-pole, double-throw switch, S, is to enable one to quickly alter from: (a) connection of shunt field winding directly to the brushes of the motor to (b) connection of shunt field winding directly to the supply mains.

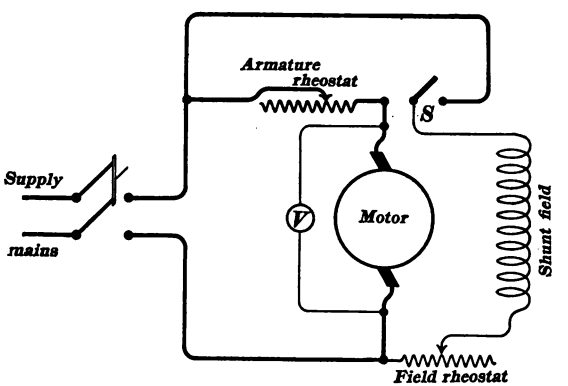

Fig. 8.

The armature rheostat is used for starting the motor and also for varying the voltage between the armature terminals of the motor as explained later. The armature rheostat should have a much higher resistance than an ordinary starting rheostat.

In starting the motor it is best to have the shunt field connected directly to the supply mains. *The field circuit should never be broken while the supply switch is closed, unless there be considerable resistance in the armature circuit.* Disregard of this precaution will cause an excessive rush of current through the armature, which may injure the machine.

Work to be done. — 1. *Effect of lead of brushes.* Adjust the brushes to the neutral axis by moving them back and forth until the speed of the motor is a minimum; this should be done with full field excitation and with armature rheostat all cut out. Keeping E_x constant, observe and record E_x and speed when the brushes are in the neutral axis, also when the brushes have a forward lead of two segments and when the brushes have a backward lead of two segments.

Caution. — The machine will be driven dangerously fast if the brushes are shifted too far from the neutral axis, and serious sparking may occur at the same time.

When this study is finished, adjust the brushes to the neutral axis and clamp the rocker arm.

2. *Effect of changing impressed voltage.* The impressed voltage, E_x, as measured by the voltmeter, may be most easily varied by manipulating the armature rheostat.

Observe speeds corresponding to a series of values of E_x, first, when the shunt field is connected directly to the supply mains, and second, when the shunt field is connected to the armature terminals.

3. *Effect of resistance in the field circuit.* With constant impressed voltage (armature rheostat all cut out), observe and record the speed of the motor for two or more positions of the field rheostat handle.

4. *Effect of magnetic shunt.* — With constant impressed voltage observe and record the speed of the motor with and without a block of iron laid across the pole pieces.

Carefully tabulate all the observations made in this experiment.

Report. 1. Explain in detail the effect on the speed of the motor, of shifting the brushes.

2. Explain why the speed falls off proportionately with E_r when the shunt field is connected directly to the supply mains; and why it does not fall off so rapidly when the shunt field is connected to the armature terminals. Base these explanations upon equation (3).

3. Explain the phenomena observed in (3) and (4) above.

Experiment 8.

CHARACTERISTICS AND MAGNETIZATION CURVE OF A SERIES GENERATOR.

The object of this experiment is to determine the curves which show the behavior of a series generator in operation.

The *external characteristic* of a generator is a curve of which the abscissas represent various values of current delivered by the generator to a receiving circuit, and the ordinates represent the corresponding voltages between the terminals of the machine, speed of driving being constant.

The *internal characteristic* of a generator is a curve of which the abscissas represent various values of current in the armature, and the ordinates represent the corresponding values of the total electromotive force induced in the armature, speed of driving being constant.

The *magnetization curve* of a dynamo is a curve of which the abscissas represent various values of field current, and the ordinates represent the corresponding values of electromotive force induced in the armature; speed of driving being constant and current output of machine being zero or nearly zero.

The external characteristic of a generator is experimentally determined by driving the generator at constant speed and taking simultaneous readings of voltage across the generator terminals and current delivered to a receiving circuit of which the resistance is decreased in steps until the machine is heavily loaded.

The internal characteristic of a generator is always derived by calculation from the observed external characteristic.

The magnetization curve of a generator is experimentally determined by driving the machine at constant speed and observing the values of terminal voltage for various values of field current. The machine should be separately excited so that the armature current of the machine may be zero and the observed terminal voltage equal to the total electromotive force induced in the armature.

Apparatus. — (*a*) *For characteristic curve.* — Arrange to drive a series generator at approximately constant speed. Connect the generator terminals through a suitable ammeter to a suitable rheostat which is to serve as a receiving circuit, and connect a suitable voltmeter to the generator terminals. A revolution counter for determining the speed of the generator is also required.

(*b*) *For the magnetization curve.* — Arrange to drive the generator at approximately constant speed as before. Connect its field winding through a suitable ammeter and a suitable rheostat to a separate source of exciting current, and connect a suitable voltmeter to the terminals of the armature. A revolution counter is required as before.

Work to be done. — (*a*) *External characteristic curve.* — Adjust the generator brushes to the neutral axis and clamp the rocker-arm. Take sets of simultaneous readings of current delivered to receiving circuit, I_x, terminal voltage, E_x, and speed, for a series of values of I_x from zero to about 50 per cent. in excess of the rated full-load current of the machine.

It is usually very difficult to keep the speed of a machine constant, and the observed values of E_x in this particular case [both (*a*) and (*b*)] can be easily corrected for variations of speed and thus reduced to a chosen standard speed.

The value of I_x is varied by changing the resistance of the receiving circuit.

Difficulty may be encountered in causing the generator to build up. The most favorable condition for building up is when the resistance of the receiving circuit is low. It may be necessary to almost short-circuit the generator momentarily in order to make it build up. This short-circuiting should be done with caution and the ammeter should be closely watched so that the short-circuit can be relieved instantly if the current becomes excessive.

The readings should be tabulated as indicated by the accompanying form.

2. *Magnetization curve.* — With the machine arranged for separate excitation, take sets of simultaneous readings of terminal voltage ($E_x = E_a$), field current and speed; first for a series of increasing values of field current and second for a series of decreasing values of field current.

Before taking the first set of readings the residual magnetism of the generator should be reduced to a very small value. This can be done by reversing the field current repeatedly and at the same time decreasing its value slowly until it is very small.

In taking the sets of readings for increasing (or decreasing) values of field current, each value of field current should be carefully approached from below (or above).

A large number of sets of readings should be taken in order to bring out the very slight difference between the two branches of the magnetization curve, namely, the branch for increasing field current and the branch for decreasing field current.

A maximum field current 50 per cent. in excess of the rated full load current of the machine is generally allowable.

The observations should be tabulated as indicated by the accompanying form.

3. Measure the resistance of the armature (including resistance of brushes, brush contacts, and brush leads) and the resistance of the field winding, using a suitable method, see Experiment 4.

Report. — 1. Reduce all voltage readings to a standard speed.

2. Plot the external characteristic from the observed data, and derive and plot the total characteristic from it by adding the respective RI drops in the armature and field winding. Also plot on the same sheet the straight line of which the ordinates represent the values of the RI drop in the armature and field winding.

3. Plot the magnetization curve, ascending and descending branches, on the same sheet with the characteristic curves.

External Characteristic

No.	Amp. I_x	Volts E_x	Speed	Volts Corrected

Form 8*a*.

Magnetization Curve.

No.	Amp. Field	Volts E_a	Speed	Volts Corrected

Form 8*b*.

The student should refer to a treatise on characteristic curves for full discussion of theory. See Appendix B, Vol. I, *Elements of Electrical Engineering*, Franklin and Esty.

Experiment 9.

CHARACTERISTICS AND MAGNETIZATION CURVE OF A SHUNT GENERATOR.

The object of this experiment is to determine the curves which show the behavior of a shunt generator in operation. Read the introduction to Experiment 8.

Apparatus. — (*a*) *For characteristic curve.* Arrange to drive a shunt generator at constant speed Connect the generator terminals through a suitable ammeter to a suitable rheostat which is to serve as a receiving circuit. Connect a suitable ammeter in the field circuit * and connect a suitable voltmeter to the generator terminals.

* In case of necessity the field current can be derived from observed terminal volt- nd observed resistance of the field winding.

(*b*) *For the magnetization curve.* — Drive the machine as before, disconnect the receiving circuit and field ammeter, and arrange to supply field current from a separate source through a suitable ammeter and rheostat, adjustable of course. The field rheostat that belongs to the machine will not have sufficiently high resistance to reduce the field current to the lowest value desired, so that several such rheostats should be connected in series. The voltage of the separate source of current for excitation should be at least equal to the rated voltage of the machine under test, and if possible, a voltage 15 or 20 per cent. higher should be used so that the field excitation of the machine under test may be carried above normal value.

Work to be done. — 1. *Characteristic.* Start the machine, adjust the brushes to the neutral axis, and adjust the field rheostat until the voltage of the machine is at its normal value. Take sets of simultaneous readings of terminal voltage, E_x, of current delivered to the receiving circuit, I_x, and of field current, I_s, for a series of increasing values of I_x beginning with $I_x = 0$. Before each set of readings is taken it is necessary to adjust the speed of the machine to a chosen standard value because in this case corrections for variations of speed cannot be easily made.

The value of I_x may be carried up to 50 per cent. in excess of the normal full-load value.

The characteristic curve of a shunt generator droops suddenly when I_x reaches a large value, after which both I_x and E_x decrease as the resistance of the receiving circuit decreases, and the curve comes back to the origin of coördinates. Ordinarily this sudden drooping of the curve occurs for values of I_x so great as to endanger the generator, but if the observations are taken very quickly it may be possible to determine points in the region of rapid drooping and on the branch of the characteristic which comes back to the origin of coördinates.

2. *Magnetization curve.* — Take sets of simultaneous readings of field current, I_s, terminal voltage, E_x ($= E_a$, under conditions of test), and speed, n, for a series of values of field current increasing

from zero to a maximum and then coming back to zero. Enter these observations in a form similar to Form 8*b*.

Residual magnetism should be eliminated as explained in Experiment 8.

It will be found that very high values of resistance in the adjustable rheostat are necessary to give small values of I_s. The lowest value of I_s should be approximately one-tenth of the normal value of I_s, and voltages should be observed at the start when I_s is zero, and at the end when I_s is again zero. The observed values of E_a may be reduced to a chosen standard speed as in Experiment 8.

External Characteristic.

No	Amp. I_x	Volts E_x	Amp. I_s	Speed

Form 9.

Report. — 1. Plot the external characteristic from the observed data and derive and plot the total characteristic. The derivation of the total characteristic is explained in Appendix B, Vol. I, *Elements of Electrical Engineering*, Franklin and Esty.

2. Plot the ascending and descending branches of the magnetization curve on one sheet, separate from the characteristic curves.

3. Explain why the characteristic curves of a shunt generator turn back towards the origin after a certain value of current is reached.

Experiment 10.

CHARACTERISTICS OF A COMPOUND GENERATOR. ADJUSTMENT OF THE SERIES WINDING FOR A DEFINITE DEGREE OF COMPOUNDING.

The object of this experiment is to determine the necessary data for plotting the internal and external characteristics of a compound generator, and to familiarize the student with the ordinary method employed in adjusting the degree of compounding.

Read the introduction to Experiment 8.

A generator is said to be flat-compounded when the magnetizing action of its series field winding is such that the terminal voltage of the generator has the same value at both zero load and full load.

A generator is said to be over-compounded when the magnetizing action of its series field winding is such that the terminal voltage of the generator has a greater value at full load than at zero load.

A generator is said to be 10 per cent. over-compounded when its full-load voltage is 110 per cent. of its zero-load voltage.

The ideal variation of voltage in the case of an over-compounded generator would be along a straight line connecting the zero-load and full-load values. In fact, however, the voltage of a compound generator varies as shown by the ordinates of the curves in Fig. 9, and the regulation of a compound generator is

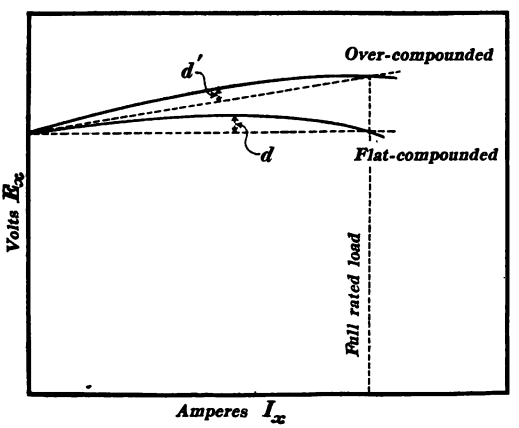

Fig. 9.

defined as the value of the maximum vertical deviation, d or d', Fig. 9 (in volts), of the curves from the ideal straight lines as shown; these deviations being expressed as percentages of the full-load voltage of the machine.

The series field winding of a compound generator usually has

a greater number of turns than is actually required, so that the compounding of the machine may be adjusted to any desired degree by connecting a shunt across the terminals of the series field winding and adjusting this shunt.

Apparatus. — The apparatus required for this experiment may be seen from the diagram of connections, Fig. 10.

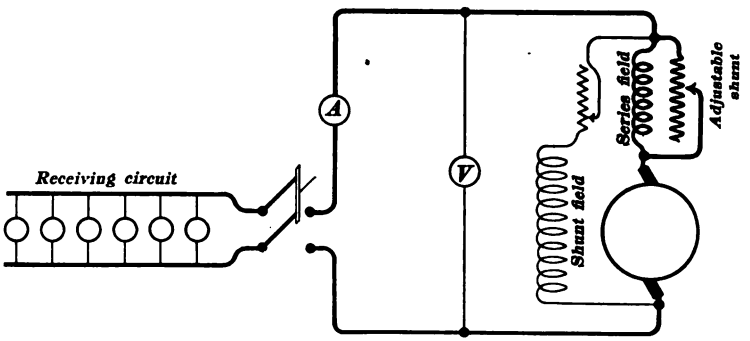

Fig. 10.

The compound generator, which is to be driven at constant speed, should be provided with a series field winding which can be adjusted to give at least 5 per cent. over-compounding.

A given machine may not have a sufficient number of turns in its series winding to give the desired degree of over-compounding. This defect may be remedied by operating the machine at less than its normal field excitation by inserting resistance in its shunt field circuit. The zero-load voltage given by the machine under these conditions is to be taken as the normal zero-load voltage of the machine, or the machine may be speeded up so as to give its rated voltage notwithstanding the reduced field excitation.

For varying the degree of compounding a greater or less length of German silver strip or wire may be connected across the series field winding.

For convenience it is essential that a switch be inserted between
erator and the receiving circuit.

be done. — 1. Drive the machine to be tested at con-

stant normal speed and zero-load, and adjust the voltage to its desired value by means of the shunt field rheostat. The field rheostat is then to be left untouched. Now throw on full-rated load, and if the full-load voltage is different from the zero-load voltage, adjust the series field shunt until the terminal voltage has the same value as at no load.

2. Having thus adjusted for flat-compounding, take the data for the external characteristic by observing sets of simultaneous values of terminal voltage, E_x, and external current, I_x (speed being kept constant). Take about six values of I_x ranging from zero to full-load value.

3. Adjust the machine to give 5 per cent. over-compounding by varying the length of German silver strip or wire that is connected as a shunt to the series field winding.

4. After having thus adjusted for 5 per cent. over-compounding take the data for the external characteristic as under 2

No	Amperes Load I_x	Volts E_x	Speed

Form 10.

5. Measure the resistance of the armature and of the series field winding by one of the methods of Experiment 4.

It is necessary to keep the speed of the generator constant throughout this experiment inasmuch as corrections for variations of speed cannot easily be made.

Report. — 1. From the observed data plot the external characteristic of the generator for the case in which the machine is flat-compounded, and for the case in which the machine is over-compounded.

2. Derive and plot the internal characteristic for each case.

3. Designate on both external characteristics the maximum deviation, d and d', as shown in Fig. 9 and determine therefrom the percentage regulation of the machine in each case.

Experiment 11.

CHARACTERISTICS OF A SERIES MOTOR.

The object of this experiment is to determine the curves which show the behavior of a series motor in operation. The important curves are: (*a*) The curve of which the abscissas represent values of current delivered to the motor and ordinates represent corresponding motor speeds, supply voltage being at a specified constant value and starting resistance being reduced to zero; (*b*) the curve of which the abscissas represent values of current delivered to the motor and ordinates represent corresponding values of torque developed by the armature; and (*c*) the curve of which the abscissas represent values of current delivered to the motor and ordinates represent corresponding values of the efficiency of the motor, supply voltage being at a specified constant value and starting resistance being reduced to zero.

Theory. — The series motor is a so-called *variable-speed motor*; that is to say, the speed of the motor varies greatly with load when the supply voltage is constant, and the motor operates better at starting than the shunt motor which is called a *constant-speed motor.*

The output of a motor in horse-power is given by the equation:

$$P \text{ (in horse-power)} = \frac{2\pi TN}{33{,}000}$$

where T is the torque in pound-feet developed by the motor, and N is the speed in revolutions per minute. The power output in watts is given by multiplying the right-hand member of this equation by 746.

Apparatus. — An assigned series motor is to be driven from constant-voltage mains. A rheostat, having sufficient current carrying capacity to permit of its being left in circuit continuously if desired, is connected in series with the motor, a suitable ammeter is connected in the motor circuit, and a suitable voltmeter is connected across the motor terminals.

The motor is loaded by a brake arranged for measuring torque. Two forms of brake are shown in Figs. 11 and 12, in which P is the motor pulley. The reading of the spring dynamometer in Fig. 11 in pounds is to be multiplied by the length of the lever-

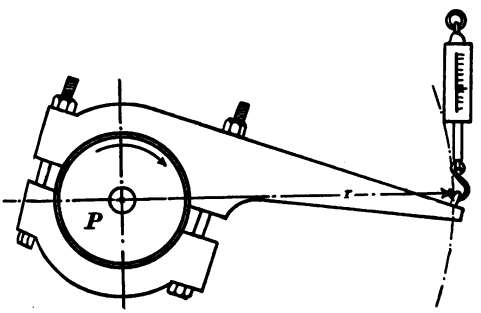

Fig. 11. Prony Brake.

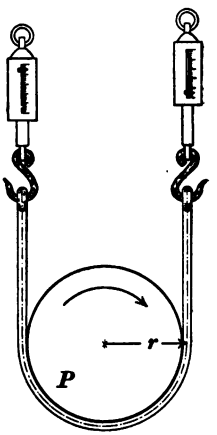

Fig. 12. Strap Brake.

arm, r, in feet to give the torque in pound-feet. The difference of the two dynamometer readings in Fig. 12 in pounds is to be multiplied by the distance, r, from the center of the pulley to the middle of the strap in feet to give the torque in pound-feet.

When a brake is used some means must be employed for cooling the rim of the pulley. This cooling is most satisfactorily accomplished by using a pulley with inwardly projecting flanges so that water may be held by these flanges when the pulley is in rotation.

Caution. — Never connect a series motor to supply mains unless the motor is loaded beforehand. In the present instance the brake should be fairly tight, the supply switch may then be closed (starting resistance being of course in the motor circuit) and then as the starting resistance is cut out, the brake must be repeatedly adjusted to keep the motor from running too fast.

Work to be done. — 1. Having started the motor as explained above tighten the brake until the motor takes a current about 50

per cent. greater than its rated full-load current, then take sets of simultaneous readings of current input, volts between motor terminals, motor speed, and of spring dynamometers, for a series of decreasing values of current, taking pains to bring the voltage between the motor terminals to a desired standard value before each set of readings by adjusting the rheostat. In proceeding

Number	Observed					Calculated			
	Current Input	Terminal Volts	Speed	D_1	D_2	Torque	Watts Output	Watts Input	Eff.

Form 1..

with these observations the motor will run faster and faster and the series of observations must be brought to an end when the speed becomes as great as the motor can safely stand.

2. Measure the radius of the motor pulley and the thickness of the brake strap, or if the Prony brake is used, measure the lever-arm, r, of the brake (at right angles to axis of spring dynamometer).

Report. — 1. Calculate and tabulate the values of torque and efficiency.

2. Plot the three curves specified in the opening paragraph of this experiment.

3. On the basis of these curves discuss the applicability of the series motor to different classes of work.

Experiment 12.

CHARACTERISTICS OF A SHUNT MOTOR.

bject of this experiment is to determine the curves which behavior of a shunt motor in operation.

— The shunt motor is a so-called constant-speed motor

because the speed of the motor does not vary greatly with load when the motor is driven from constant-voltage mains.

Regulation. — The regulation of a shunt motor is the difference between its zero-load speed and its full-load speed divided by the full-load speed, the voltage between the motor terminals being constant. This ratio multiplied by 100 gives the regulation in per cent.

Apparatus. — An assigned shunt motor is to be driven from constant-voltage mains. The diagram of connections is shown in Fig. 13. The auxiliary adjustable resistance, *R*, which must have

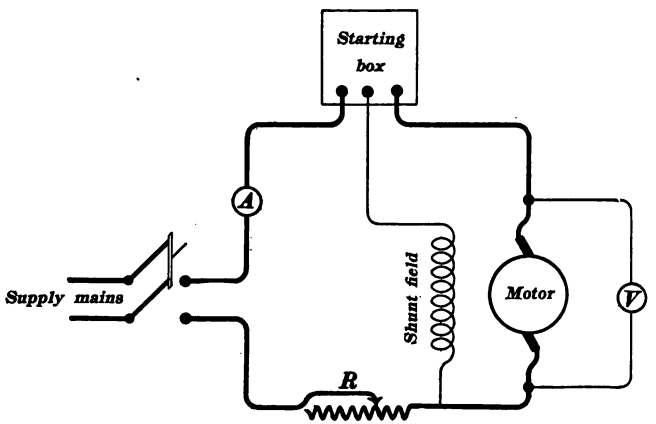

Fig. 13.

a fairly large current carrying capacity, is used to bring the voltage across the motor to the desired value before each set of readings is taken. This auxiliary resistance may be omitted if the supply voltage is very steady.

The motor is to be loaded by means of a Prony brake or strap brake as explained in Experiment 11.

The brake should be loose when the motor is started inasmuch as the shunt motor has no tendency to race.

Work to be done. — 1. Cut out the auxiliary resistance, loosen the brake, and start the motor by means of the starting rheostat. Then tighten the brake until the motor takes a current corre-

sponding to about 50 per cent. over-load, and take sets of simultaneous readings of current input, volts between motor terminals, motor speed, and of spring dynamometers, for a series of decreasing values of current, taking pains to adjust the auxiliary resistance so as to bring the voltage across the motor terminals to a desired standard value before each set of readings. This series of readings is to be continued until the motor load is zero.

The observations may be tabulated in the same form as in Experiment 11.

2. Measure the radius of the motor pulley and the thickness of the brake strap, or, if the Prony brake is used, measure the lever-arm, r, of the brake.

Report. — 1. Calculate and tabulate the values of torque and efficiency.

2. Plot the three curves specified in the opening paragraph of Experiment 11.

3. On the basis of these curves discuss the adaptability of the shunt motor to different classes of work.

Experiment 13.

CHARACTERISTICS OF COMPOUND MOTORS.

The object of this experiment is to determine the variations of speed of the compound motor with load: (*a*) for the differential compound motor, and (*b*) for the cumulative compound motor.

Theory. — The compound motor has a shunt field winding and a series field winding. The effect of the series winding depends upon the way in which it is connected. If it is connected so as to add to the magnetizing action of the shunt field winding the motor is called a cumulative compound motor. If it is connected so as to oppose the magnetizing action of the shunt field winding the motor is called a differential compound motor. In the first case the speed of the motor falls off greatly with increase of load, and in the second case the speed of the machine falls off but little, or even increases with increase of load. Furthermore,

the cumulative compound motor resembles the series motor in that it has a very strongly excited field at starting and therefore develops a large starting torque.

Apparatus. — A compound motor is arranged to be driven from constant-voltage mains. The diagram of connections is shown in Fig. 14. The auxiliary resistance, *R*, is for adjusting

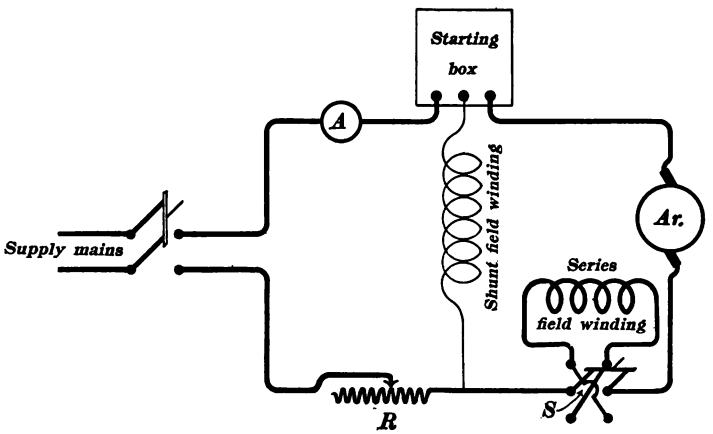

Fig. 14.

the voltage between the motor terminals to a standard constant value. This resistance may be omitted if the supply voltage is very steady.

The voltmeter which is used for measuring the voltage across the motor terminals is not shown in Fig. 14.

The motor is most conveniently loaded by means of a brake. This experiment as here outlined does not involve the determination of torque so that the brake does not need to be provided with spring dynamometers. The degree of loading of the motor may be inferred from the ammeter reading.

The series field winding is connected through a reversing switch, *S*, so that the compounding of the motor may be quickly changed from cumulative to differential.

Work to be done. — 1. Start the motor and load it slightly by

tightening the brake and note speed of the motor for each position of the reversing switch, *S*, Fig. 14. That position of the switch for which the motor speed is high corresponds to differential compounding, and that position for which the motor speed is low corresponds to cumulative compounding.

No	Current Input	Terminal Volts	Speed

Form 13.

2. With the motor arranged for cumulative compounding take sets of simultaneous sets of readings of current input, terminal voltage and speed for a series of values of current, ranging from zero load on motor to about 25 per cent. over-load. The terminal voltage is to be kept constant by adjusting the auxiliary resistance, *R*, Fig. 14.

3. Repeat 2 with the motor arranged for differential compounding.

Caution. — When the motor is arranged for differential compounding the field magnetism of the motor may be reduced to nearly zero even with a moderate load, if the series field winding has many turns. If this should happen the input of current will be excessive and the motor may be damaged.

Report. — 1. Plot the curve of which abscissas represent the values of current delivered to the motor and of which the ordinates represent the corresponding speeds of the motor: (*a*) For the differential compound motor, and (*b*) for the cumulative compound motor.

2. On the basis of these curves discuss the adaptability of the compound motor (differential and cumulative) to various classes of work.

Experiment 14.

MAGNETIZING ACTION OF ARMATURE CURRENTS ON FIELD.

The object of this experiment is to study the magnetizing effect of the armature in helping or opposing the field flux.

Theory. — When the brushes are located in the neutral axis, the armature currents do not perceptibly increase or decrease the amount of flux which is forced through the armature by the action of the field winding. When the brushes are shifted from the neutral axis in the direction of rotation of the armature, the brushes are said to have a *forward lead.* In this case the magnetizing action of the armature currents (in a generator) tends to oppose the field flux; in other words, the armature currents have a demagnetizing action on the field. When the brushes are shifted from the neutral axis in a direction opposed to the direction of rotation of the armature, the brushes are said to have a *backward lead.* In this case, the magnetizing action of the armature currents (in a generator) tends to increase the field flux. In a motor, on the other hand, a forward lead of the brushes causes the armature currents to increase the field flux and a backward lead of the brushes causes the armature currents to oppose the field flux.

A generator operates most satisfactorily when the brushes are given a slight forward lead and a motor operates most satisfactorily when the brushes are given a slight backward lead. Therefore, under the best operating conditions the armature currents oppose the field flux both in a generator and in a motor.

The above statements refer to one aspect only of the magnetizing action of the armature currents. The other aspect, which is in some respects the more important of the two, is what is called the cross-magnetizing action of the armature currents. A fairly complete discussion of the magnetizing action of the armature currents in a dynamo is given in Chapter VI of Franklin and Esty's *Elements of Electrical Engineering.*

Apparatus. — A small dynamo, shunt or series, with adjustable rocker-arm, has its armature, only, connected through a suitable resistance to supply mains. The resistance should be chosen so that approximately the full rated current of the motor will be permitted to flow. In the second part of the experiment a suitable voltmeter is to be connected to the field terminals of the small

machine. As to what constitutes a suitable voltmeter see the caution given under 2 below.

Work to be done. — 1. With the field of the small dynamo unexcited and with approximately full rated current flowing through the armature, note the direction of running of the machine under the following conditions:

(*a*) With brushes in the neutral axis,

(*b*) With brushes set at, say, 45° in one direction from the neutral axis,

(*c*) With brushes set at, 45° in the other direction from the neutral axis, and

(*d*) With brushes set at right angles to the neutral axis.

Record the direction of rotation as clock-wise or counter clock-wise as the case may be.

Caution. — Be ready to open the circuit if the motor speed becomes too great.

2. Block the armature to prevent rotation and, with approximately full-load current flowing through the armature, observe the throw of the voltmeter which is connected to the field terminals when the supply switch is suddenly opened. Make this observation first when the brushes are at right angles to the neutral axis, and repeat the observation for a series of positions of the brushes until the brushes have been shifted at least 180° from the initial axis. The armature being stationary the commutator bars may be used in lieu of a divided circle for reading the successive positions of the brushes.

No	Armature Amperes	Brush Position.	Voltmeter Deflection

Form 44.

Caution. — If the dynamo has a shunt field winding (many turns of fine wire) the electromotive force induced in the field winding when the main switch is opened may be large enough to damage the voltmeter. Make a few preliminary trials starting

with the brushes in the neutral axis and shifting them cautiously farther and farther from the neutral axis.

Report. — 1. Explain the phenomena observed in the first part of the experiment.

2. Plot the observations obtained in the second part of the experiment using shift of brushes expressed in numbers of commutator segments as abscissas, and corresponding throws of voltmeter as ordinates, and explain the significance of this curve.

Experiment 15.

STRAY POWER TEST OF A SHUNT DYNAMO.

The object of this test is to determine the efficiency of a dynamo, when used as a motor or as a generator, by the "stray power" method.

This experiment may be applied to a series dynamo, but in the series dynamo the stray power loss varies so much under the normal conditions of operation of a series machine (as generator or as motor) that a single determination of stray power loss is of little value. In fact if the stray power loss of a series dynamo is to be determined it ought to be determined at different speeds and at different degrees of field excitation. The method employed is exactly the same as the method outlined in this experiment.

Theory. — The power losses in a motor or generator are, the RI^2 loss in the field circuit, the RI^2 loss in the armature circuit, and the so-called stray power loss. The RI^2 losses can be easily calculated when resistances and currents are known. The stray power loss, however, includes all those losses in a dynamo which cannot be satisfactorily calculated from simple data, these losses are:

1. Eddy-current and hysteresis losses, chiefly in the armature core, due to reversals of magnetization as the armature rotates. These losses are often called the core loss in the machine.

2. Friction losses in the bearings and at the brushes.

3. Air friction loss, or windage, due to the fan-like action of the rotating armature.

In the case of a shunt dynamo which is driven at its rated voltage either as a generator or as a motor the stray power loss is nearly constant and independent of load. Therefore, the stray power loss of such a machine at its rated speed and field excitation is significant. In the case of a series dynamo, however, either the field excitation or speed or both may vary greatly with load and the stray power loss is extremely variable.

The stray power loss of a shunt dynamo can be determined only by direct experimental test, and it varies with speed and with degree of field excitation. If the stray power loss is determined for a given speed and given degree of field excitation (given value of voltage E_a induced in the armature), it may be approximately calculated for a slightly different speed and different field excitation (different value of E_a) from the fact that it is roughly proportional to E_a. For example, the stray power loss of a dynamo is determined for a speed and field excitation which gives a terminal voltage of, say, 110 volts with zero current in the armature ($E_a = 110$ volts). When the given dynamo is operated as a generator, delivering current at a terminal voltage of 110 volts, the value of E_a is equal to 110 volts *plus* the RI drop in the armature and the stray power loss is increased approximately in proportion to E_a. When the given dynamo is operated as a motor, receiving current from 110 volt mains, the value of E_a is equal to 110 volts *minus* the RI drop in the armature and the stray power loss is decreased approximately in proportion to E_a.

When the stray power loss of a shunt dynamo at given speed and field excitation has been determined and the armature and field resistances of the dynamo are known, the efficiency of the machine for a specified terminal voltage and current output as a generator or for a specified terminal voltage and current intake as a motor, may be calculated as follows: From specified terminal voltage the field current may be calculated and thence the

field loss; from specified current output (or intake) the armature current may be found by adding (or subtracting) the field current and thence the armature loss calculated; the stray power loss under the specified conditions may be found from the observed stray power loss as explained above; the power output of the machine as a generator (or its power intake as a motor) for the specified conditions is known; and we have:

$$\text{For a generator, the efficiency} = \frac{\text{output}}{\text{output} + \text{losses}}.$$

$$\text{For a motor, the efficiency} = \frac{\text{intake} - \text{losses}}{\text{intake}}.$$

Apparatus.— The shunt dynamo, of which the efficiency is to be indirectly determined under specified conditions as to terminal voltage and current output (or intake), is arranged to be driven as a motor from supply mains giving approximately the specified voltage. Suitable ammeters are placed in the field and armature circuits and a suitable voltmeter is connected to the dynamo terminals. (The field ammeter is not really necessary.)

Work to be done. — 1. Start the motor, allow it to run at zero load, and take readings of terminal voltage, armature current and field current. The speed of the machine should also be observed and recorded.

2. Repeat (1) with the voltage between the terminals reduced to about 75 per cent. of the rated voltage of the machine. An auxiliary resistance may be connected in the armature circuit to reduce the terminal voltage.

3. Measure the resistance of the armature and of the shunt field winding by suitable methods.

Report.—1. From the observed data calculate the stray power loss of the dynamo and the corresponding value of E_a.

2. Calculate the efficiency of the machine as a motor when driven at the rated terminal voltage when the intake of power is ¼, ½, ¾, 1 and 1¼ of full-rated intake. Tabulate these results in the accompanying form.

3. Calculate the efficiency of the machine as a generator supplying current at the rated terminal voltage when the output of

Motor

Watts Intake	Armature RI^2 Loss	Field RI^2 Loss	Total RI^2 Loss	Stray Loss	Total Loss	Eff.

Generator

Watts Output	Armature RI^2 Loss	Field RI^2 Loss	Total RI^2 Loss	Stray Loss	Total Loss	Eff.

Form 15.

power is $\frac{1}{4}$, $\frac{1}{2}$, $\frac{3}{4}$, 1 and $1\frac{1}{4}$ of full rated output. Tabulate these results in the accompanying form.

4. Plot the two efficiency curves with fractions of intake (or output) as abcissas and also plot the losses on the same sheet.

Experiment 16.

MEASUREMENT OF INSULATION RESISTANCE.

In this experiment the resistance of the insulation between the supposedly insulated metal parts of a dynamo is to be measured, for example, the resistance between the wire on an armature and the armature shaft or core, or the resistance between the wire of a field coil and the field-magnet frame. Insulation resistance is usually expressed in megohms.

Theory. — The method usually employed in the dynamo laboratory for measuring insulation resistance is a method which may

be conveniently called the voltmeter method, inasmuch as it is carried out by means of a voltmeter. The resistance of the voltmeter must be known.

An electromotive force nearly as large as can be measured by the voltmeter is connected to the instrument and read. The same electromotive force is then connected so as to cause a current to flow through the voltmeter and through the insulation of which the resistance is to be measured and the voltmeter reading is again taken.

Let R = the unknown resistance.

R_v = the resistance of the voltmeter.

V = the voltmeter reading when the given electromotive force is connected directly to the voltmeter.

V' = the voltmeter reading when R is in series with the voltmeter.

Then

$$R = \frac{R_v(V - V')}{V'}$$

Apparatus. — A good high resistance voltmeter shoud be used for this experiment. A Weston portable direct-current voltmeter is suitable. It is especially important to note the zero reading of the instrument, inasmuch as the deflection, V', may be a barely perceptible fraction of one division.

Work to be done. — 1. Measure the insulation resistance between armature and frame, between each brush holder and frame, and between field coils and frame of the assigned dynamo. All the parts mentioned must of course be disconnected from each other when the measurements are made.

2. Measure the insulation resistance between the ground and one wire of one of the local circuits in the laboratory. Use the water or gas pipes to obtain a ground connection.

3. Measure the insulation resistance between the two wires of the circuit mentioned in (2).

Report. — Calculate the insulation resistances from the observed data, and state the value of the highest resistance that can be measured by means of the assigned voltmeter when an electromotive force of 110 volts is used.

PART II.

DIRECT-CURRENT STUDIES AND TESTS.

(*Continued.*)

Experiment 17.

REGULATION OF A SHUNT GENERATOR.

Theory. — The regulation of a shunt generator in per cent. is defined as the increase of voltage from full load to zero load expressed in per cent. of the full-load voltage, the full-load voltage being at its normal value; and speed, and resistance of shunt field circuit being constant.

When a shunt generator supplies current to glow lamps the voltage falls off as the number of lamps is increased and rises as the number of lamps is decreased. Inasmuch as the normal operating condition of the generator is considered to be at full load, the regulation should be expressed as the rise of voltage with decrease of load.

In actual service an attendant adjusts the voltage of a generator at intervals and the changes of voltage are those which are due to moderate changes of load. Therefore it is desirable to know, not only the rise of voltage from full load to zero load, but also the rise of voltage when the load is reduced step by step, the field rheostat of the generator being adjusted to give normal voltage before each reduction of load.

Apparatus. — A shunt generator is to be driven by a motor, the speed of which may be controlled by its field rheostat. The generator is provided with a field rheostat, a suitable voltmeter is connected across the generator terminals, and a suitable ammeter is connected to measure the current delivered to the receiving circuit. The receiving circuit may be a lamp bank or any suit-

able rheostat and it should be connected to the generator through a double-pole switch so that it may be easily connected and disconnected.

Work to be done. — 1. Adjust the generator-field rheostat to give normal voltage when the machine is driven at normal speed delivering full-load current, and take readings of current delivered to receiving circuit, I_x, terminal voltage, E_x, and speed.

2. Reduce the current output to three-fourths full-load value, and adjust speed to normal value leaving generator-field rheostat unchanged; then observe I_x, E_x and speed.

3. Keeping speed normal and keeping I_x at approximately three-fourths full-load value, adjust the generator-field rheostat to give normal voltage, and observe E_x, I_x and speed. Then reduce I_x to half-load value, bring speed to normal value and again observe E_x, I_x and speed.

4. Proceed in like manner to quarter-load value of I_x and then to zero value of I_x.

5. Adjust the generator-field rheostat again to give normal voltage when the machine is driven at normal speed delivering full-load current, and observe I_x, E_x and speed. Then reduce I_x to zero, adjust the speed to normal value leaving generator-field rheostat unchanged, and observe E_x and speed.

Report. — 1. Plot the observed values of E_x and I_x and connect the successive points by dotted straight lines.

2. Calculate the percentage regulation of the generator for the changes, full load to zero load, full load to $\frac{3}{4}$ load, $\frac{3}{4}$ load to $\frac{1}{2}$ load, $\frac{1}{2}$ load to $\frac{1}{4}$ load, and $\frac{1}{4}$ load to zero load.

Experiment 18.

EFFICIENCY AND REGULATION OF A DYNAMOTOR.

Theory. — A dynamotor is a machine having a single field-magnet structure and two separate windings on the same armature, each winding being provided with a commutator of its own. A dynamotor is sometimes called a direct-current transformer,

since it converts direct current at a certain voltage into direct current at another voltage. This type of machine is used for reducing voltage in telephone, telegraph, and electroplating work, in charging storage batteries, and for other purposes.

The armature winding of a dynamotor into which current is fed, the primary winding, acts as a motor winding, while the other winding, the secondary, acts as a generator, being caused to rotate in the magnetic field by the driving action of the motor winding.

A given dynamotor has a fixed ratio of primary to secondary voltage except for the slight variations discussed later under the heading of regulation. A given machine may, however, operate with a wide range of values of primary (or secondary) voltage. When a high voltage is used the machine runs at a high speed, and when a low voltage is used the machine runs at a low speed, field excitation being assumed constant.

Regulation. — When the current output of a dynamotor is increased the secondary voltage falls off. This decrease of secondary voltage is due to two things: (*a*) the RI drop in the primary is increased so that the counter-electromotive force in the primary must decrease, the speed of the machine must therefore decrease if the field excitation is constant, and hence the total induced electromotive force in the secondary is reduced because of the decrease in speed, (*b*) the RI drop in the secondary is increased.

The regulation in per cent. is the increase of secondary voltage from full load to zero load expressed as a per cent. of full-load voltage, the primary voltage being constant.

Apparatus. — The primary winding of the dynamotor armature and the shunt field winding of the machine are connected to supply mains through a starting box exactly as a shunt motor would be connected. A suitable ammeter is connected to measure the total current delivered to the machine and a suitable voltmeter is connected across the primary terminals of the machine. A suitable rheostat should be connected in the field circuit of the machine, to be used in the third part of the experiment.

The secondary terminals of the dynamotor are connected through a suitable ammeter to a suitable rheostat which is to serve as a receiving circuit, and a suitable voltmeter is connected across the secondary terminals.

The connections are shown in Fig. 15.

It is desirable to introduce a suitable rheostat, *R*, Fig. 15, in series with one of the supply mains for use in keeping the volt-

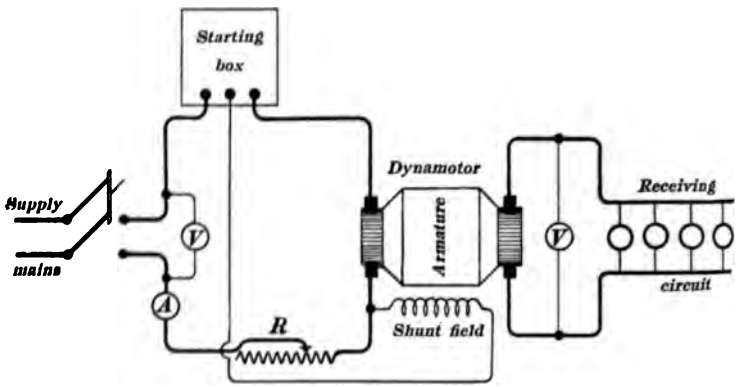

Fig. 15.

age across the primary terminals of the machine constant. This rheostat may, however, be omitted if the supply voltage is fairly constant.

Work to be done.— 1. Start up the machine with the secondary circuit open and see that everything works properly.

2. Beginning at zero current output, take simultaneous readings of volts, and amperes input, and volts and amperes output for a series of loads up to 50 percent overload. The terminal voltage on the motor side must be kept constant.

3. Take readings of primary voltage, secondary voltage, and speed, for several different positions of the field-rheostat arm, the current output of the machine being zero.

Report. — 1. Calculate the efficiency of the machine for various current outputs and plot two efficiency curves on two separate sheets of cross-section paper. In one curve use current out

puts as abscisas and efficiencies as ordinates, and in the other curve use current inputs as abscissas and efficiencies as ordinates.

Number	Observed.				Calculated.		
	Motor Volts	Motor Amperes	Gen. Volts	Gen. Amperes	Motor Input	Gen. Output	Eff.

Form 18.

2. Plot the regulation curve of the machine showing the variation of secondary terminal voltage with current output.

3. Calculate the percentage regulation of the machine.

4. Explain the readings taken in (3) above.

Experiment 19.

EFFICIENCY AND REGULATION OF A MOTOR-GENERATOR.

Theory. — A motor-generator consists of two complete dynamos mounted on one bed plate, the armatures being mounted on one long shaft, or on two shafts coupled together. One of these machines operates as a motor, taking current from supply mains, and drives the other machine as a generator.

The machine which operates as a motor may be of the direct-current or of the alternating-current type, and the machine which operates as a generator may be designed to deliver direct current or alternating current.

The most common form of motor-generator consists of an alternating-current motor and a direct-current generator.

The motor-generator consisting of a direct-current motor and direct-current generator is often used as a booster for compensating for line drop, especially in electric railway work, or for charging storage batteries. This experiment has to do with the direct-current-to-direct-current motor-generator.

Since the field magnets of the motor and generator are separate, the speed of the machine may be changed by changing the field excitation of the motor without altering the field excitation of the generator. This will of course change the voltage of the generator. Again the field excitation of the generator may be changed without altering the speed of the machine, and this will of course change the voltage of the generator. Furthermore the generator may be compounded so as to give a more nearly constant voltage with varying load.

The above flexibility of the motor-generator in the matter of changes of the generator voltage with given supply voltage, constitutes an important advantage of the motor-generator over the dynamotor which is inflexible in this respect. The dynamotor, however, has a slightly higher efficiency than the motor-generator.

Apparatus. — Connect the motor part of the motor-generator set to suitable supply mains through a starting box, placing a suitable ammeter in circuit to measure the total current delivered to the machine and connecting a suitable voltmeter across the motor terminals. It is desirable to insert a suitable rheostat in series with one of the supply mains to keep the voltage between the motor terminals constant. This rheostat may, however, be omitted if the supply voltage is fairly constant.

Connect the generator terminals through a suitable ammeter to a suitable rheostat which is to serve as a receiving circuit, and connect a suitable voltmeter across the generator terminals.

Work to be done. — 1. Start up the motor and see that the generator builds up properly. Then throw the load on the generator in order to see whether the supply voltage can be maintained constant at the value chosen.

2. Starting at zero-current output, take sets of simultaneous ıdings of volts and amperes input, and volts and amperes output ɜ series of values of current output up to 50 per cent. over-

Tabulate the observations according to Form 18.

epeat the observations specified in (2), adjusting the motor ɔsen standard speed before each set of readings.

Report. — 1. Calculate the efficiency of the motor-generator set for each value of current output, from the observations obtained under (2), above.

2. Plot two efficiency curves on two separate sheets of cross-section paper. In the one curve use current outputs as abscissas and efficiencies as ordinates, and in the other curve use current inputs as abscissas and efficiencies as ordinates.

3. Explain why the regulation obtained under the conditions specified under (3) above is better than when the motor speed is not kept constant.

4. Explain in detail the advantages of the motor-generator over the dynamotor.

Experiment 20.

COMPARISON OF CHARACTERISTICS, SHUNT- AND SEPARATELY-EXCITED.

The object of this experiment is to obtain the external characteristic of a separately-excited generator and to compare it with the external characteristic of the same machine when self-excited as a shunt machine.

Theory. — When a generator is separately excited its field current is independent of the load on the machine inasmuch as the field current is supplied from an outside source.

On the other hand, what one may call the primary decrease in voltage of a shunt generator, due to RI drop in the armature and armature reaction, causes a decrease of field current, and this decrease of field current causes a further decrease in the voltage of the machine.

Therefore the voltage of a generator falls off with increase of current output more when it is self-excited as a shunt generator than when it is separately-excited.

Apparatus. — Arrange to drive a shunt generator at constant speed. Connect the shunt field winding to the middle points of a change-over switch (double-pole, double-throw) so that the

machine may be altered at will from shunt- to separate-excitation. Connect the generator terminals through a suitable ammeter to a suitable rheostat which is to serve as a receiving circuit, and connect a suitable voltmeter to the terminals of the generator.

Work to be done. — 1. Start the generator, bring it to the desired speed, and adjust its field rheostat to give the desired terminal voltage at zero-load. The field rheostat of the machine is to be then left untouched.

2. Take sets of simultaneous readings of current output, terminal voltage, and speed for a series of values of current output ranging from zero to about 50 per cent. over-load. The speed is to be adjusted to the chosen standard value before each set of readings is taken.

3. Change to separate excitation, bring the speed of the machine to the chosen standard value and adjust the field rheostat to give the same terminal voltage as before at zero load.

4. Take sets of simultaneous readings of current output, terminal voltage, and speed for a series of values of current output ranging from zero to about 50 per cent. over-load. The speed is to be adjusted to the chosen standard value before each set of readings is taken. The field current is also to be kept constant. If there is any question as to the constancy of the field current an ammeter must be placed in the field circuit and the field rheostat manipulated so as to keep the field current constant.

5. Measure the resistance of the generator armature, inclusive of brushes and armature leads, by a suitable method.

Report. — 1. Plot the external characteristics of the machine, both for shunt excitation and separate excitation, on one sheet. Draw the armature-drop line, and derive and plot the internal characteristics of the machine, all on the same sheet.

It is interesting to consider how, by means of these curves, the total decrease of voltage (E_a) of a shunt generator from the zero-load value may be analyzed into the following parts, namely, (*a*) the part which is due to armature reaction, and (*b*) the part which

is due to the decrease of field excitation. Thus the curve, *pb*, Fig. 16 represents the total or internal characteristic of the generator with separate excitation and the curve, *pc*, represents the the total characteristic with shunt excitation. Now the decrease of E_a with separate excitation, which decrease is represented by *ab*, is due wholly to armature reaction. The effect of armature

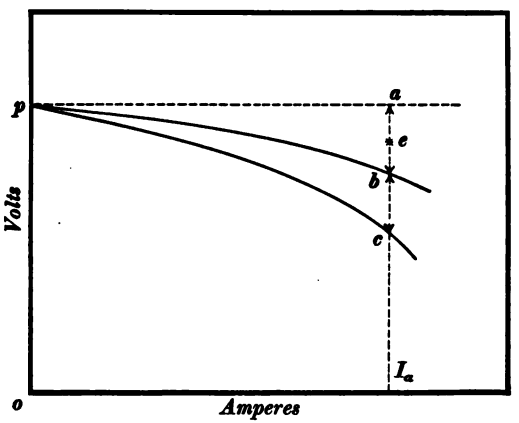

Fig. 16.

reaction is the same for given armature current, I_a, whether the machine be self-excited or separately excited, therefore *ab* also represents that part of the decrease of voltage (E_a)of the shunt machine which is due to armature reaction. Lay off *ce* equal to *ab* and we have *ae* representing that part of the decrease of E_a of the shunt machine which is due to decrease of field excitation.

Experiment 21.

ARMATURE CHARACTERISTIC. PREDETERMINATION OF COMPOUNDING.

The armature characteristic of a generator is the curve plotted with field current as ordinates and amperes output as abscissas, the field current being adjusted so as to keep the terminal voltage constant, at constant speed.

The object of this experiment is to determine the armature characteristic of a shunt dynamo, and to calculate or predetermine the number of series turns required on the field for a specified degree of compounding.

Theory. The terminal voltage of a shunt generator falls off greatly with increase of current output if the field rheostat is not touched. By manipulating the field rheostat, however, the voltage may be kept constant. This involves a gradual increase of field current with increase of current output.

To determine the number of series turns required on the field to make the machine flat-compounded, one must determine the additional ampere turns, $\mathcal{F}'$, required at full load to give the same terminal voltage as at zero load; and since the external current, I_e, supplies this addition field excitation the required number of turns is found by dividing $\mathcal{F}'$ by I_e.

To determine the number of series turns required on the field to give a specified degree, say, 5 per cent., of over-compounding, one must determine the ampere-turns of field excitation, $\mathcal{F}$, required at zero load and the additional ampere-turns, $\mathcal{F}'$, required to give the required terminal voltage at full load. In this case the shunt field winding supplies $5\mathcal{F}/100$ additional ampere turns at full load because of the increase of terminal voltage, so that the series field coil must supply $\mathcal{F}' - 5\mathcal{F}/100$ ampere-turns, which, divided by the full load current gives the required number of series turns.

Apparatus. Arrange to drive a shunt generator at constant speed. The field winding may be connected either for separate excitation or for self-excitation, but it is generally preferable to use separate excitation supplied from a slightly higher voltage source than that of the machine under test. This enables higher values of field current to be obtained than would be possible with self-excitation. Connect a suitable ammeter in the field circuit, and a suitable voltmeter to the generator terminals. Connect the generator terminals through a suitable ammeter to a suitable rheostat which is to serve as a receiving circuit.

Work to be done. — 1. Keeping the speed of the machine constant and adjusting the field rheostat to give constant terminal voltage, take sets of simultaneous readings of current output, field current, terminal voltage and speed for a series of values of current output ranging from zero to about 25 per cent. over-load.

Observed terminal voltages can here be corrected approximately for slight variations of speed.

2. Determine the values of the field current required to give: (*a*) the same voltage as in (1) at zero load, and (*b*) a ten per cent. higher voltage at full load, speed of driving being at the normal value in each case.

No.	Amperes Load	Amperes Field	Terminal Volts	Speed

Form 21.

Report. — 1. Plot the armature characteristic of the machine.

2. Calculate the number of series turns required to flat-compound the machine.

3. Calculate the number of series turns required to over-compound the machine 10 per cent.

4. Calculate the number of series turns required to flat-compound the machine, assuming 25 per cent. over-load to be the normal full load of the machine.

Experiment 22.

COMMUTATION TEST.

The object of this experiment is to study some of the factors that have a bearing upon successful commutation in a direct-current dynamo, and to make some simple test of the commutating qualities of a given machine.

The term commutation is here intended to refer to all that pertains to the operation of dynamo brushes in regard to heating and sparking.

Theory. — The theory of commutation is discussed in detail in the text books on dynamo machinery, and it is considered necessary here only to make a brief statement of the causes of faulty commutation.

1. The self-induction of the armature sections may be so great that the current in a section does not have time to decrease to zero, reverse and rise to full value during the interval that the brush short-circuits the section, so that sparking occurs when this local short circuit is broken.

2. If the brushes are displaced from the neutral axis, they will short-circuit coils in which there is a considerable electromotive force induced by rotation, thus causing local currents and sparking.

3. Roughness of the commutator or mechanical defects in the brush rigging may cause chattering of the brushes and sparking.

4. When the armature carries a large current, the cross magnetizing effect of this current distorts the magnetic field greatly, so that the brushes are no longer situated in the neutral axis, and sparking results as explained in (2) above. If for any reason, the field of the machine is weakened, the distorting effect of the armature current becomes very much more pronounced, so that sparking in a machine that ordinarily operates well, is most likely due to a temporary weakening of the field.

It is interesting to note that it is this tendency to excessive sparking when the field magnet is weakened, that limits the range of speed of a motor in the field rheostat method of speed control.

Apparatus. — (*a*) *For generator test.* Arrange to drive a shunt generator at approximately normal speed. Connect the generator through a suitable ammeter to a rheostat which is to serve as a receiving circuit. Connect two or three field rheostats in the shunt field circuit so that the field excitation can be reduced to an extremely low value.

(*b*) *For motor test.* — Connect a shunt motor through a start-rheostat to supply mains. Connect a suitable ammeter to sure the current delivered to the motor so that some indica- of the degree of loading of the motor may be had. Con-

nect two or three field rheostats in the shunt field circuit so that the field excitation can be reduced to an extremely low value. Arrange a brake for loading the motor. The determination of torque is not necessary.

Work to be done. — 1. Start the generator, adjust its field rheostat to give nearly full-rated voltage at 25 or 50 per cent. over-load. Move the brushes forwards and backwards until points are reached at which the sparking becomes noticeable. Mark these points on the machine, and determine the brush shifts later, when the machine is not running, in terms of the number of segments included between the sparking positions and the neutral axis. Determine two points in the same way at which the sparking becomes serious; this is indicated by the change of color of the sparks from blue or white to yellow, and by the straight sparks or flashes which dart from the brush contacts.

2. Take full-load current from the generator with the smallest possible amount of field current, which may require practically short circuiting the armature, and note the behavior of the brushes. This is an exceptionally severe test of the commutating qualities of the machine as explained in (4) under "Theory."

3. Start the shunt motor. Maintain the current input to the motor at its full-load value, and reduce the field current, and allow the speed to increase until the sparking becomes objectionable. This is a severe test of the commutating qualities of the motor. Take care in this test not to drive the motor dangerously fast.

Report. — Give a detailed description of the work done under (1), (2) and (3) above, and of the results obtained.

Experiment 23.

DETERMINATION OF MAGNETIC LEAKAGE COEFFICIENT.

The object of this experiment is to determine the magnetic leakage coefficient of a dynamo and to study the variation of this coefficient under different conditions.

Theory. — The magnetic leakage coefficient, ν, of a dynamo is defined by the equation :

$$\nu = \frac{\Phi_c}{\Phi_a}$$

in which Φ_c is the total magnetic flux in the field core of a dynamo, and Φ_a is the portion of this flux which actually passes through the dynamo armature and is useful in the production of electromotive force.

The leakage flux, $\Phi_c - \Phi_a$, flows through the air from pole-piece to pole-piece and this leakage flux depends greatly upon the size and shape of the pole pieces and upon their distance apart.

The leakage flux in a given dynamo increases with the magnetomotive force between the pole pieces. This magnetomotive force must be increased when the flux density in the armature core is increased, and it must be increased to force a specified flux through the armature in opposition to the demagnetizing action of the armature current. Therefore the magnetic leakage coefficient of a given dynamo increases with increase of armature flux (increase of voltage at given speed) and it increases with increase of armature current.

The method of determining the magnetic leakage coefficient of a dynamo having a single magnetic circuit is as follows : The armature of the machine is fixed so that it cannot turn and a temporary coil, *A*, Fig. 17, of insulated wire is wound lengthwise over the armature so as to enclose all of the flux that passes through the armature. Another coil, *B*, having the same number of turns as coil *A*, is wrapped around the field coil of the dynamo as near to the yoke as possible. A low reading voltmeter is arranged so as to be connected to coil *A* or coil *B* at will, by means of a double-pole double-throw switch. The field winding of the dynamo is connected through a suitable rheostat l switch to supply mains. The throw of the voltmeter is ved upon breaking the field circuit of the dynamo, first with eter connected to coil *A* and then with the voltmeter to coil *B*. These throws are proportional to Φ_a and Φ_c

respectively, and therefore the ratio of the throws is equal to the magnetic leakage coefficient.

When the field magnet of a dynamo provides two magnetic paths for the flux which emanates from one pole piece the coil *B* should be divided, half its turns being placed on one magnetic circuit and half on the other magnetic circuit, these two halves should each have the same number of turns as coil *A*, and they should be properly connected in series with each other.

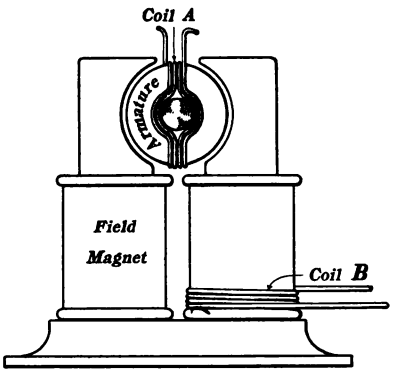

Fig. 17.

Apparatus. — Any type of dynamo may be used in this experiment, but the coil *A*, Fig. 17, is most easily placed on a dynamo of the bipolar type. Wind the two coils *A* and *B* and connect the voltmeter as specified above. It is well to connect a resistance box in circuit with the voltmeter so that by varying the resistance the voltmeter throw may be reduced to a readable value. The field winding is connected as specified above.

Work to be done. — 1. Determine the leakage coefficient of a machine having a single magnetic circuit: (*a*) for a field current about 50 per cent. above normal; (*b*) for normal field current; and (*c*) for 50 per cent. of normal field current.

2. Determine the coefficient of leakage of a machine having a double magnetic circuit, for normal field current.

Report. — Calculate the coefficient of leakage for each case, and explain why it varies as found.

Experiment 24.

DISTRIBUTION OF MAGNETIC FLUX IN THE AIR GAP OF A DYNAMO.

The object of this experiment is to determine the flux density at different places in the air gap of a generator, and to compare the distribution of flux at zero-load with the distribution of flux at full-load.

Theory. — When a generator is at zero-load the magnetic flux density in the air gap is nearly uniform under the pole faces. When the generator is loaded, however, the cross-magnetizing action of the current in the armature tends to crowd the magnetic flux towards one side of the pole faces, in the direction of rotation of the armature.

The electromotive force induced in one of the armature conductors is for each position of the conductor proportional to the flux density in the air gap at the conductor, inasmuch as the velocity of the conductor is constant. An armature coil consists of two bundles of armature conductors which are at approximately similar positions under two adjacent pole pieces, and therefore, since the distribution of flux under adjacent pole pieces is similar, the electromotive force induced in an armature coil is proportional at each instant to the flux density in the air gap at either side of the coil.

(*a*) By using a pair of thin pilot brushes at a distance apart exactly equal to the distance from center to center of two adjacent commutator bars, as shown in Fig. 18, the voltage induced in the successive armature coils as they pass through a given position may be measured by means of the voltmeter V. Then by shifting his pair of pilot brushes step by step around the commutator a ies of voltmeter readings may be obtained which are propor- l to the flux densities at corresponding points around the

other method of exploring the magnetic field is to use lot brush in connection with one of the main brushes

of the machine, a voltmeter, V, being connected between the two brushes, as indicated in Fig. 19. The voltmeter in this case, reads the sum of the voltages induced in all the coils on the armature included between the two contacts made by the brushes.

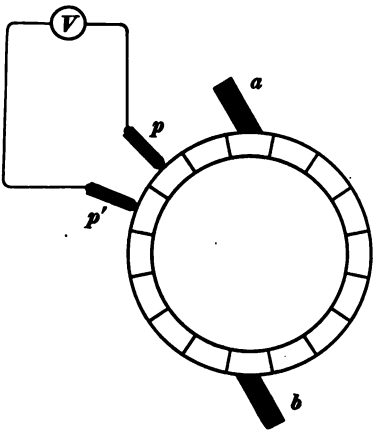

Fig. 18.

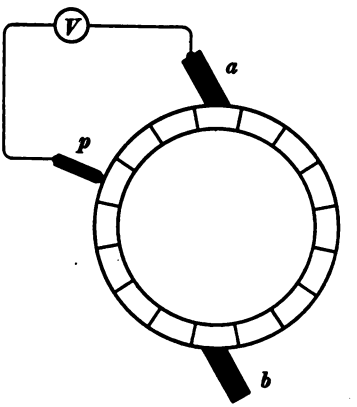

Fig. 19.

The curve plotted from observations obtained by method (*b*) with readings of voltmeter as ordinates and positions of the pilot brush as abscissas, is the integral of the curve plotted from observations obtained by method (*a*).

Apparatus. — To perform this experiment successfully, the machine should be provided with an auxiliary brush holder for carrying the double pilot brush, and a graduated circle whereby this brush holder may be set accurately at different positions around the commutator. One of the brushes of the double pilot brush, may be used for the second method.

The generator should be so arranged that current may be taken from it while the readings with the pilot brush or brushes are being taken.

Suitable instruments should be used for measuring the terminal voltage and current output of the generator.

Work to be done. — 1. With the generator running at normal voltage and zero load, observe and record the readings of the

voltmeter connected between the two pilot brushes for a series of equidistant positions around the commutator covering an angle of at least 180 electrical degrees.

2. Repeat (1) with the machine delivering normal full-load current at normal terminal voltage.

3. Determine the flux distribution of the same machine at zero load by the single pilot brush method, by taking the reading of the voltmeter connected between one pilot brush and one of the main brushes, for a series of equidistant positions around the commutator, covering at least 180 electrical degrees. Begin with the pilot brush touching the main brush.

4. Repeat (3) with the machine delivering full-load current.

No	Position of Pilot Brush	Voltmeter Reading	Amperes Load	Terminal Volts

Form 24.

Report. — 1. Plot the voltmeter readings obtained in (1) and (2) above as ordinates and the corresponding positions of the pair of pilot brushes as abscissas. Plot these two curves on one sheet. Indicate on this sheet the positions and widths of the north and south pole faces of the machine.

2. Plot the voltmeter readings obtained in (3) and (4) above as ordinates and the corresponding positions of the single pilot brush as abscissas. Plot these two curves on one sheet.

3. Subtract each voltmeter reading obtained in (3) and (4) above, from the voltmeter reading immediately preceding it and plot these differences as ordinates with the corresponding positions of the single pilot brush as abscissas. Plot these two curves on one sheet. Compare these curves with the curves determined by the first method.

4. Explain the difference between the flux distributions at zero load and at full load as shown by the curves.

Experiment 25.

SEPARATELY-EXCITED MOTOR RUN BY A SERIES GENERATOR.

The object of this experiment is to study the behavior of a separately-excited motor, the armature of which is supplied with current from a series generator of about the same size. Under these conditions a peculiar action takes place; the motor speeds up to a certain point, then it quickly stops, reverses, and speeds up in the opposite direction, and so on repeatedly. The duration of one complete cycle depends upon the conditions in the two machines as to resistance, inertia of armatures, field strength, etc. If the separately excited motor is loaded by a brake, it may be made to run steadily in one direction or the other.

Theory. — The analysis of this action is as follows: The coördinates of the curve in Fig. 20 show the relation between the terminal voltage, E, of the series generator and the current, I, delivered by it. The coördinates of the straight line, ab, in Fig. 21 show the relation between the impressed voltage, E, upon and the current, I, in a circuit of resistance, R, and in which there is a counter voltage, E_c.

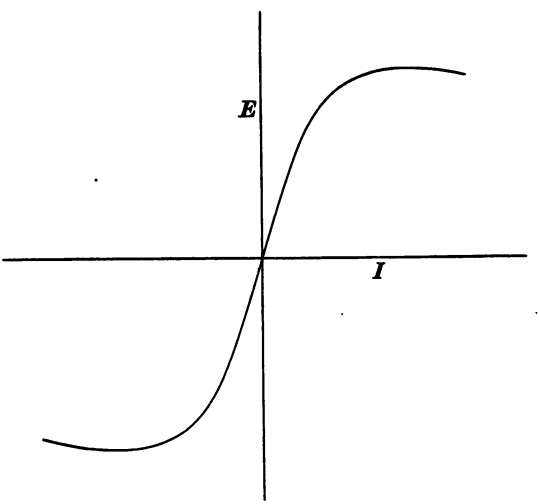

Fig. 20.

When the series generator delivers current to the circuit of resistance, R, and containing a counter voltage, E_c, the generator must operate at that point of the curve, Fig. 20, where this curve is intersected by the straight line, ab, as shown in Fig. 22. The generator cannot operate at the point; p', inasmuch as the operation at p' is unstable. Thus a slight increase of current at p'

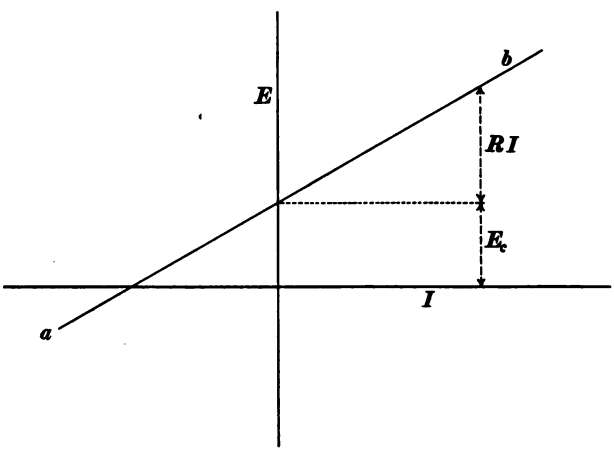

Fig. 21.

would cause the voltage of the generator to become greater than is needed to maintain the current so that the current would go on increasing, and a slight decrease of current at p' would cause the voltage of the generator to become less than is needed to maintain the current and the current would go on decreasing.

Consider what takes place when the series generator is operating at the point, p, Fig. 22, and the separately excited motor is running so as to give a counter voltage, E_c. The separately excited motor, being unloaded, will increase in speed, causing E_c to increase in value. This will continue until the line, ab, comes to or slightly above the position, $a'b'$, Fig. 22. The voltage, E, of the generator is then not sufficient to maintain the current, the rent begins to drop in value and the more it drops the less ıate E is to maintain it. Therefore the current quickly

drops to zero. The momentum of the motor, however, keeps it running and because of its speed it maintains its counter voltage, E_c, which is now the only voltage acting. Therefore E_c begins to start a reversed current, and the separtely excited machine acts as a generator until its momentum is exhausted and its speed reaches zero. This reversed current causes the series generator to build-up with reversed field magnetism, its voltage, E, then maintains the reversed current which starts the other machine running in the reverse direction as a motor, this causes a reversed counter voltage, which increases until the series generator again breaks down, and so on. A load on the motor may keep its speed or voltage below that critical value which

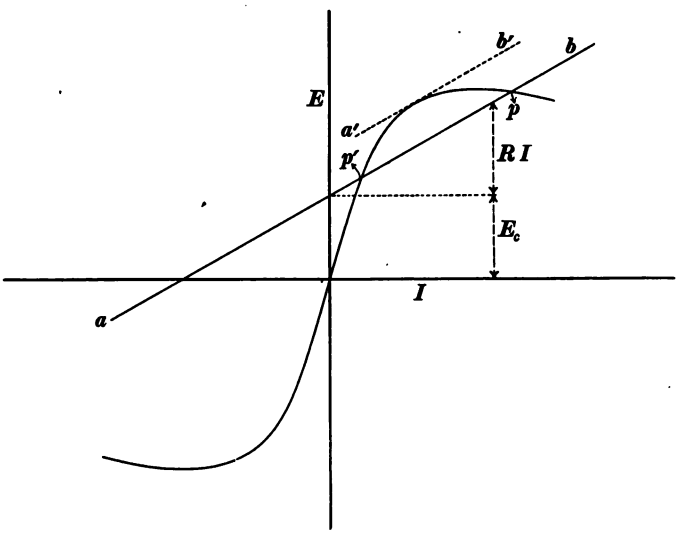

Fig. 22.

brings the line, *ab*, into the position, *a'b'*, Fig. 22, in which case the motor will run steadily.

Apparatus. — Drive a series generator and connect the generator terminals through a switch, a double reading ammeter, and a rheostat (such as would ordinarily be used as a receiving circuit), to the armature terminals of a motor of which the field

winding is connected to the supply mains, and connect a double reading voltmeter to the motor terminals.

Work to be done. — 1. After connecting the apparatus as directed, insert all the variable resistance in the main circuit between the two machines. Start up the series generator, and cut out the variable resistance cautiously until the motor begins to oscillate. If the series generator does not build up, a quick turn of the armature of the separately-excited machine by hand will give it a start.

Care must be taken to prevent the current from reaching excessive values.

2. Determine the effect on the period of oscillations and on the ammeter and voltmeter readings of increasing and decreasing the value of the adjustable resistance in the main circuit.

3. Determine the effect on the period of oscillations and on the ammeter and voltmeter readings of increasing and decreasing the field excitation of the motor.

4. Determine the effect on the rotation of the motor of applying a steady load to its pulley. Will the motor run in either direction in this case, and what determines that direction?

A record of a series of ammeter and voltmeter readings, of periods of oscillation, of positions of rheostat arms is required under (2) and (3).

Report. — Give a complete descriptive record of the observations and explain the phenomena observed.

Experiment 26.

SHUNT MOTOR RUN BY A SERIES GENERATOR.

This experiment, like Experiment 25, illustrates some of the peculiar conditions that may exist in the operation of dynamo machinery. In this case, a shunt motor is connected across the terminals of a series generator of about the same size. The behavior of the shunt motor is somewhat different from that of the separately excited motor in the preceding experiment. It will

start from rest and rotate rapidly in one direction for a short period, then slow down, stop, and run in the reverse direction a few revolutions, and then speed up in the same direction as at first, and so on indefinitely. By loading the motor with a brake, it may be caused to run steadily in one direction.

Theory. — The analysis of the action that takes place in this case is very similar to that described in Experiment 25, which should be read over before beginning this experiment. The difference in the behavior of the shunt motor and the separately excited motor grows out of the fact that the separately excited dynamo can operate as a generator with either direction of running or as a motor with either direction of running, whereas the shunt dynamo must run in one certain direction to operate either as a generator or as a motor.

The detailed action in the case of the shunt motor is as follows: At the start the series generator builds up and sends a very large current through the shunt machine and this current divides and flows partly through the shunt field winding. This causes the shunt dynamo to run as a motor in a certain direction, say, clockwise. As the motor speed increases its counter electromotive force, E_c, increases until the line, ab, Fig. 22, reaches the position $a'b'$. The current then quickly drops to zero, the series generator loses its magnetism, and the shunt machine continues to run because of its momentum and becomes for the time being a generator which starts a reversed current. This reversed current causes the series machine to build up as a generator in the reverse direction and the generator action of the shunt machine quickly brings that machine to rest. But the shunt machine does not lose its field magnetism instantly so that the current, which is now maintained by the series generator causes the shunt machine to make a few reversed revolutions until its field magnetism is lost. Then the current, from the series generator, although in a direction the reverse of the current at the start, causes the shunt machine to run as at the start and the whole process is repeated, over and over again.

Apparatus. — Arrange to drive a series generator, and connect the generator terminals through a double-reading ammeter and a suitable rheostat to the terminals of a shunt motor of about the same size as the series machine. Connect a double reading voltmeter to the motor terminals.

Work to be done. — 1. After connecting the apparatus as directed, insert all the variable resistance in the main circuit between the two machines. Start up the series generator, and cut out the variable resistance cautiously until the motor begins to run. Care must be taken to prevent the current from reaching an excessive value. Note the behavior of the armature of the motor and correlate therewith the indications of the double reading ammeter and voltmeter.

2. Determine the effect on the oscillations and on the ammeter and voltmeter readings, of increasing and decreasing the value of the adjustable resistance in the main circuit.

3. Determine the effect of increasing and decreasing the resistance in the field circuit of the motor.

4. Determine the effect on the rotation of the motor of applying a steady load to its pulley. Will the motor run in either direction in this case, and what determines that direction?

A record of a series of ammeter and voltmeter readings, of periods of oscillation, and of positions of rheostat arms is required under (2) and (3).

Report. — Give a complete descriptive record of the observations and explain the phenomena observed in this experiment.

Experiment 27.

SERIES MOTOR DRIVEN BY A SERIES GENERATOR.

The series motor exhibits certain interesting characteristics when it is supplied with current from a similar series dynamo of the same size acting as a generator and driven at constant speed. The object of this experiment is to study this arrangement.

Theory. — The ordinates of the curve, *A*, Fig. 23, represent the values of the total electromotive force induced in the armature of a series dynamo (generator or motor) driven at constant speed, and the abscissas represent the corresponding values of current flowing through the machine.

Imagine two similar series dynamos electrically connected, and suppose that the resistance of the circuit is zero. Then if one of the machines were driven at constant speed as a generator the other would run at constant speed as a motor whatever its load might be. This is evident when we consider: (*a*) that the same current would flow through both machines, (*b*) that the counter electromotive force of the motor would have to be equal to the induced electromotive force in the generator if the circuit were of zero resistance, and (*c*) to give the same induced voltage with the same current the speeds would have to be equal because the machines are supposed to be exactly alike.

If, however, the circuit has an appreciable resistance, then the motor would necessarily run at a slower speed, enough slower in fact to make its counter-electromotive force less than the induced voltage in the generator by the amount, RI, where R is the resistance of the entire circuit and I is the current flowing.

In general it may be stated that the motor speed would be but little lower than the generator speed, since RI is generally small in comparison with the total induced voltage of either machine. Therefore it is evident that the motor speed would be nearly constant; but in fact the difference between generator speed and motor speed is nearly the same at all loads and therefore the motor speed is almost exactly constant. This is evident when we consider that the field flux in each machine is nearly proportional to I (because the machines are series-excited), and that a constant speed difference will produce a voltage difference proportional to the flux, or proportional to I, or equal to RI.

Thus the curve, *A*, Fig. 23, is the total characteristic of a given series generator driven at a certain speed, the curve, *B*, is the total characteristic of an exactly similar dynamo at a slightly

reduced speed, and the vertical distance between the two curves is approximately proportional to I or equal to RI where R is a constant.

If the field winding of the motor be shunted so that a fraction of the current is diverted from the coil, then the total current delivered to the machine to give a certain induced voltage at a certain speed would have to be increased, or the induced voltage

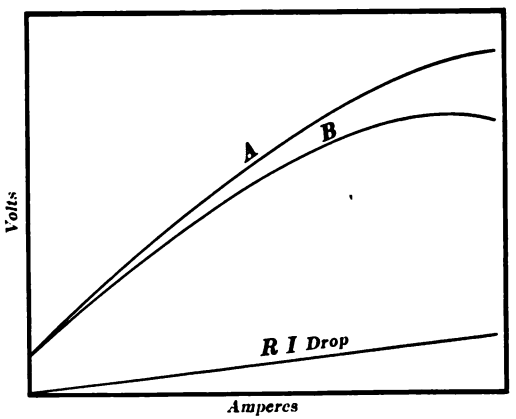

Fig. 23.

for a certain delivered current and speed would be reduced. Therefore a series dynamo which is driven as a motor from a similar series dynamo running as a generator at constant speed, can have its speed increased by shunting its field winding, and the motor will run at this increased speed independently of its load.

Apparatus. — A series generator is to be driven at constant speed. The generator terminals are connected, through a suitable ammeter, and a low resistance rheostat, to the terminals of a similar series machine which is to operate as a motor. A brake is arranged for loading the motor, the degree of loading being indicated, however, by the ammeter, not by spring dynamometers, for convenience.

Provision is to be made for shunting the field winding of the motor with a foot or more of German silver wire.

Work to be done. — 1. Start the generator and close the circuit to the motor. Cut out all of the resistance in the circuit and observe generator and motor speeds and current for a series of motor loads (as indicated by the ammeter) from zero to about 25 per cent. over-load.

2. Increase the resistance of the circuit and observe generator and motor speeds and current from zero load to about 25 per cent. over-load.

3. Cut out all of the resistance in the circuit, shunt the motor-field winding so as to raise its speed about 10 per cent. above the generator speed, and observe generator and motor speeds and current from zero load to about 25 per cent. over-load.

No.	Amperes	Gen. Speed	Motor Speed

Form 27

4. Increase the resistance of the circuit, motor field being shunted, and observe generator and motor speeds and current from zero load to about 25 per cent. over-load.

Report. — 1. Reduce all observed motor speeds to approximately what they would have been at constant generator speed, by multiplying each observed motor speed by the ratio: Standard generator speed divided by observed generator speed.

2. Plot four curves all on the same sheet [for (1), (2), (3) and (4) above], with loads in amperes as abscissas and corrected motor speeds as ordinates.

Experiment 28.

THREE-WIRE GENERATOR.

The object of this experiment is to study the performance as to regulation of a three-wire system under different conditions of load, the neutral point being obtained by Dobrowolsky's method, using a double-current generator.

Theory. — In the Dobrowolsky three-wire generator, one end of the armature is provided with collecting rings, which, in a bipolar machine, are tapped to two diametrically opposite points on the armature winding, thus forming a machine similar to the single-phase rotary converter or double-current generator. The two brushes which slide on these collecting rings are connected to the terminals, *h* and *i*, of the series connected coils of an auto-transformer *C*,* and the common junction of the two auto-transformer coils, *g*, is connected to the middle, or neutral, wire of the three-wire system, as shown in Fig. 24. In this way the

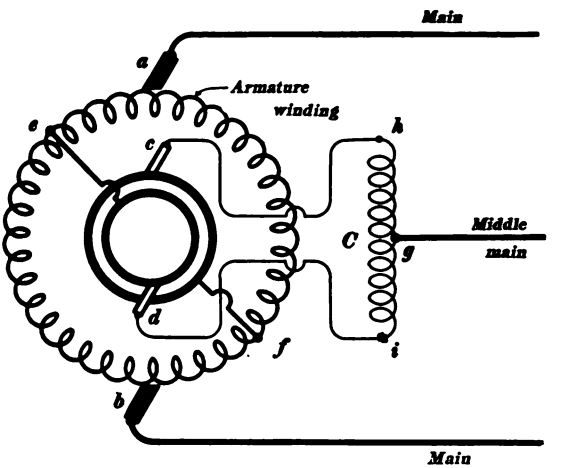

Fig. 24.

neutral wire is kept at a potential midway between the potentials of the direct-current brushes *a* and *b*.

The inductance of the winding, *hi*, Fig. 24, prevents an excessive alternating-current from flowing across from *c* to *d*. The

*In published descriptions of the Dobrowolsky arrangement this device, *C*, is usually called a choke coil, it is not however a choke coil except in its action in preventing an excessive flow of alternating current across from *c* to *d* in Fig. 24. In its effect on the parts of the direct current which flow through the two halves of *C*, it is essentially an auto-transformer. One half of the "direct-current" flows down hill, as it were, to the point, *f*, and delivers power through the core of *C* which pumps the other half of the "direct-current" up hill, as it were, to the point, *e*.

voltage across *op* or *pq* at will. Two suitable rheostats may be used as receiving circuits instead of lamps.

Work to be done. — 1. Start the generator, adjust the receiving circuits, *A* and *B*, so that each takes full-load current, and adjust the field rheostat of the generator to give its normal voltage (sum of two voltmeter readings across *A* and across *B*). Then reduce

No.	Amp. A	Amp. B	Amperes (In Middle Main) Calculated	Volts op	Volts pq	Total Volts

Form 28.

the current taken on one side, say, *B*, step by step until it is zero, keeping total voltage of generator constant, and take sets of simultaneous readings of voltage across *A*, voltage across *B*, current in ammeter, *A*, and current in ammeter, *B*.

2. Repeat (1) reducing current on side, *A*, step by step to zero, current on side, *B*, being zero.

Report. — 1. Plot two curves from the data obtained under (1) above, using volts across *A* and volts across *B* as ordinates, and current on *B* side as abscissas.

2. Plot two curves from the data obtained under (2) above, using volts across *A* and volts across *B* as ordinates and current on *A* side as abscissas.

Experiment 29.

LINE BOOSTERS.

The object of this experiment is to study the operation of a booster which is used to compensate for the line drop on a long feeder.

Theory. — A booster is a generator, driven usually by a motor, and arranged so as to add its voltage to the main supply voltage

in a station either for charging storage batteries or for supplying current at an increased voltage to a pair of very long feeders, thus compensating for the *RI* drop in the feeders.

The *RI* drop in a pair of feeders is of course proportional to the current flowing in the feeders, and in order that a booster may compensate automatically for this *RI* drop, the voltage of the booster must be equal to *RI*, that is the voltage of the booster must be proportional to the current. A series generator connected in the feeder circuit satisfies this condition fairly well inasmuch as the field excitation is produced by the feeder current and therefore the field flux and voltage of the generator will be roughly proportional to the feeder current the speed of driving being constant.

Apparatus. — A booster suitable for compensating for line drop is a series generator designed to give a low voltage. If such a generator is not available, a series generator having a moderately high voltage rating may be adapted for use either by driving it at a very low speed or by shunting its field winding, with a fairly low resistance. The arrangement of the apparatus is shown in Fig. 26. A suitable voltmeter, not shown in the figure, is pro-

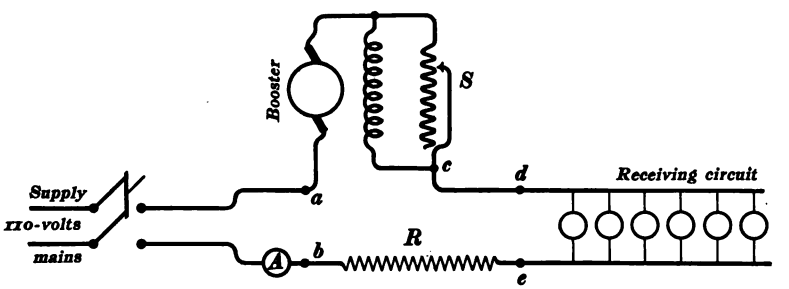

Fig. 26.

vided with long leads terminating in sharp metal points in insulating handles so that the voltmeter may be used to read the voltage across *ab*, *bc* or *dc* at will. A resistance, *R*, is connected in circuit to take the place of line resistance. This resistance should absorb about 20 or 25 volts with full-load current. The resist-

ance, *S*, which shunts the field winding of the booster is adjustable, so that it may be used in adjusting the booster so that it may exactly compensate for line drop for a particular load. The rated full-load current of the booster dynamo will be taken as the full-load current of the line.

Work to be done. — 1. Adjust the receiving circuit to take full-load current, and adjust the resistance, *S*, so that the voltage across *de* is the same as the voltage across *ab*. Then take sets of simultaneous readings of voltage across *ab*, voltage across *bc*, voltage across *de*, and current for a series of values of current ranging from full-load current to zero.

If the supply voltage across *ab* varies during the test subtract the excess above a chosen standard value, say 110 volts, from the corresponding observed voltages across *de* so as to correct these readings for variations of supply voltage.

No.	Volts ab	Volts bc	Volts de	Amperes Load	Volts bc Corrected	Volts de Corrected

Form 29.

Report. — 1. Plot the corrected voltages across *bc* and *de* as ordinates and the corresponding values of line current as abscissas, on one sheet.

2. Under what conditions might a "negative booster" be used, that is, a booster connected as in Fig. 25 but arranged to lower the supply voltage?

Experiment 30.

BATTERY BOOSTERS.

A battery booster is an auxiliary generator used for raising a supply voltage for charging a storage battery, or used for automatically controlling the charge and discharge of a storage

battery so as to equalize the generator load in a station of which the current output fluctuates rapidly. A simple shunt generator is generally employed for the former, and what is called the differential booster is generally employed for the latter purpose. The object of this experiment is to study the operation of the differential booster.

See Chapter VIII, Volume I, Franklin and Esty's *Elements of Electrical Engineering*, for a discussion of the action of the differential booster.

Apparatus. — The diagram of connections is shown in Fig. 27. Instead of using a special main-generator, *G*, current may be more conveniently taken from standard 110-volt mains, in which case

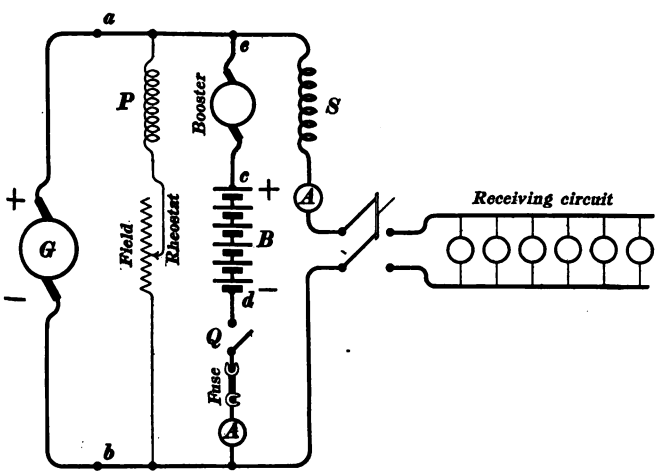

Fig. 27.

the booster and battery are intended to equalize the current taken from the mains when the resistance of the receiving circuit is varied. The battery voltage (at 1.95 or 2.0 volts per cell) should be nearly equal to the supply voltage, namely, 110 volts.

The ammeter in the battery circuit should be double reading inasmuch as the battery current changes direction during the test, and the readings of this ammeter should be recorded as positive or negative as the case may be.

A suitable voltmeter, not shown in the figure, should be arranged with long leads (see directions for Experiment 29) so as to be used for measuring the voltage across *ab*, *cd* or *cc*, Fig. 27, at will.

The booster dynamo should have a rated voltage of about 15 volts, its fine wire field winding, *P*, should be adapted to connection across 110-volt mains, and its coarse wire field winding, *S*, should give a field excitation equal to that produced by the coil, *P*, when the current in *S* is at its mean value, that is, when the current which is delivered to the receiving circuit is at its average value.

An ordinary compound 110-volt dynamo may be used for the booster if it is driven at about one-sixth of its normal speed and if its series field winding is increased by a sufficient number of turns of suitable wire to give full-field excitation with a current equal to the mean current delivered to the receiving circuit.

The current rating of the booster should be about equal to the mean current delivered to the receiving circuit.

The charge- and discharge-current rating of the storage battery should be about equal to the mean current delivered to the receiving circuit.

The current delivered to the receiving circuit in the following test is to be varied from zero to a value about twice as great as the mean.

The booster may be driven by a shunt motor.

Work to be done. — 1. Start the booster with its field winding *P* acting and test the voltage across the booster terminals to make sure that *e* is the negative terminal and *c* the positive terminal. Then open the circuit of the *P* winding, close the switch to the receiving circuit, adjust the receiving circuit to take the mean current, and again test the voltage across the booster terminals to make sure that the field coil, *S*, causes *e* to be the positive terminal and *c* the negative terminal of the booster. Then open the circuit of the *P* winding, close the switch *Q*, and adjust

the field rheostat until the battery current is zero. The apparatus is now ready for test.

2. Take sets of simultaneous readings of current delivered to the receiving circuit, and battery current, for a series of values of current delivered to the receiving circuit ranging from zero to about twice the mean. This whole series of readings should be taken as quickly as possible and the series should be duplicated.

3. Take a series of readings exactly similar to (2) except that a stated interval of time is allowed to elapse between sets of observations.

No.	Gen. Amperes	Battery Amperes	Line Amperes

Form 30.

4. Calculate the current taken from the supply mains (represented by the generator, G, in Fig. 27) for each pair of readings of current delivered to receiving circuit and battery current.

Report. — 1. Plot two curves, one showing the relation between current delivered to receiving circuit, battery current, and current taken from the supply mains for relative slow increase of receiving-circuit current, and the other showing the same for the quickest possible increase of receiving-circuit current. Use receiving-circuit current as abscissas and represent the other two currents as ordinates.

2. Explain in detail the operation of the differential booster.

Experiment 31.

EFFICIENCY OF A GENERATOR BY A CRADLE DYNAMOMETER.

The direct determination of the efficiency of a generator depends upon the mechanical measurement of the power used to drive the generator and the electrical measurement of the power delivered by the generator. The measurement of mechanical power, however, is difficult and generally inaccurate, and, therefore, efficiencies are usually determined indirectly. See Experiment 15.

The object of the present experiment is to determine the efficiency of a generator directly by means of the cradle dynamometer.

Theory. — The cradle dynamometer is a rigid frame which swings freely on a pair of knife edges. The generator is supported in this frame and adjusted so that the axis of the generator shaft is accurately coincident with the line of the knife edges, *k*, as shown in Fig. 28. Under these conditions the pull of the driving belt tends to tilt the cradle only because of the difference in tension of the belt on the two sides of the pulley; and therefore the tilting action of the belt on the cradle, which may be balanced and measured by the sliding weight, *W*, on the lever arm, *A*, is a measure of the driving torque exerted by the belt. The product of this driving torque in pound-feet by 2π times the speed of the generator in revolutions per minute gives the power in foot-pounds per minute that is delivered to the generator.

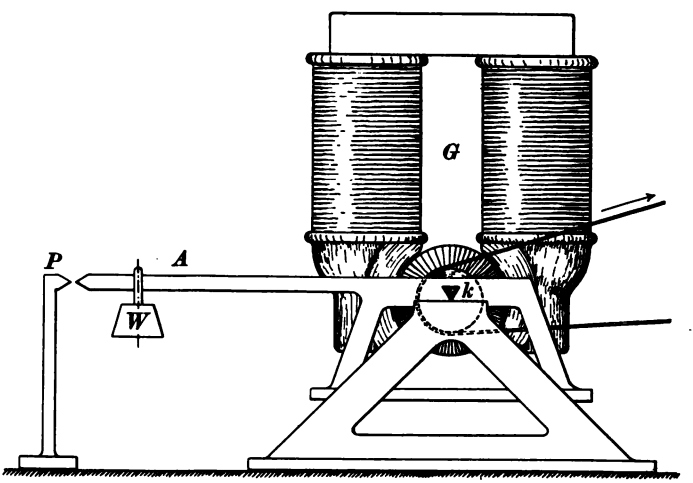

Fig. 28.

The necessary adjustments of the cradle dynamometer are as follows:

(*a*) The generator must be placed so that the axis of the generator shaft is accurately coincident with the line of the knife edges.

(*b*) The center of gravity of the cradle and generator must be below, and it should be but a short distance below, the knife edges. This adjustment may be accomplished by placing weights on the upper or lower portion of the cradle as may be required.

(*c*) The weight, *W*, Fig. 28, must be moved along the arm, *A*, until the arm stands in a level position, when the generator belt is off.* The level position of the lever arm is indicated by a pointer, *P*, which is supported from the floor. The position of the weight, *W*, to bring the arm, *A*, into a level position with generator belt off is taken as the zero position of *W*.

Apparatus. — A generator is mounted in the cradle dynamometer and the adjustments, *a*, *b* and *c*, above, are made. The generator is to be driven by belt from a motor or line shaft, and the generator terminals are connected by flexible leads to a suitable rheostat which is to be used as a receiving circuit. A suitable ammeter is connected to read the current output of the generator and a suitable voltmeter is connected to the generator terminals.

Work to be done. — 1. Make the adjustments, *a*, *b* and *c*, above; and record the zero position of the weight, *W*. Then start the generator and take sets of simultaneous readings of speed, position of weight, *W*, terminal voltage, and current output for a series of values of current output ranging from zero load to full load or more. The position of the weight, *W*, is to be adjusted for each value of current so as to bring the lever arm into a horizontal position as indicated by the pointer, *P*.

No.	Amp Load	Terminal Volts	D.	Speed

Form 31.

* In fact the belt should be left on during this adjustment so that the tilting action which may be due to the pull of the belt combined with an error of centering of the generator may be balanced out, in the adjustment of the weight, *W*, to the zero position.

Arrange the data according to Form 31, in which D is the reading on the lever arm, A, of each position of the weight, W.

2. Weigh the sliding weight, W.

Report. — 1. Calculate the output of the machine, the input, and the efficiency for each set of readings.

2. Plot output, input (both in watts), and efficiency as ordinates and amperes output as abscissas on one sheet.

Experiment 32.

ADJUSTMENT OF COMPOUNDING BY CHANGE OF SPEED.

When a new compound generator is to be installed to operate in parallel with other compound generators it generally is necessary to alter the degree of compounding of the new generator slightly to make it operate properly in parallel with the other generators.

If the degree of compounding of the new generator has to be lowered, this may be easily accomplished by placing more or less resistance in its series field circuit (the set of generators being of course provided with equalizer connections).

If the degree of compounding of the new generator has to be raised relative to the other generators, this may be accomplished by lowering the degree of compounding of the other generators by connecting more resistance in each of their series field circuits; or, the degree of compounding of the new machine may be raised by arranging to drive it at an increased speed with reduced shunt field excitation to keep its voltage normal at zero load. When the shunt field excitation of the generator is thus reduced the additional field flux produced by the full-load ampere-turns in the series field coil is increased and the degree of compounding of the machine is raised.

Apparatus. — Drive an ordinary compound generator by a shunt motor, the speed of which may be varied at will by adjusting its field rheostat. Connect the generator through a suitable ammeter to a suitable rheostat which is to serve as a receiving circuit, and connect a suitable voltmeter to the generator terminals.

Work to be done. — 1. Drive the generator at the lowest speed at which its zero-load voltage can be brought up to the rated value, say, 110 volts, and at this speed observe the terminal voltage and speed of the machine at zero load, and observe terminal voltage, speed and current output at full load.

2. Raise the speed step by step until the highest permissible speed is reached and for each speed adjust the field rheostat to give 110 volts at zero load and take a set of observations similar to (1).

No.	Speed Zero Load	Volts Zero Load	Speed Full Load	Volts Full Load	Amperes Load

Form 32.

Report. — Plot a curve of which abscissas represent generator speeds and ordinates represent differences (positive or negative) between voltage at zero load and full load.

PART III.

DIRECT CURRENT TESTS.

(*Concluded.*)

Experiment 33.

DETERMINATION OF THE NUMBER OF TURNS OF WIRE IN THE FIELD WINDING OF A DYNAMO.

It is often desirable in the dynamo laboratory to determine the number of turns of wire in the field winding of a dynamo. The object of this experiment is to make this determination electrically.

Theory. — When the iron of the field magnet and armature core of a dynamo is below magnetic saturation the flux produced, and, therefore, the electromotive force induced in the armature at a given speed, is very nearly proportional to the ampere-turns of field excitation.

An auxiliary field winding, having a known number of turns of wire, is wound over the given field winding of the machine. The generator is driven at a certain speed and the voltage across the brushes is observed: (*a*) When a measured current flows through the given field winding, and (*b*) when a measured current flows through the auxiliary winding. Then the number of turns of wire in the given winding may be calculated on the assumption that the ampere-turns in the two cases are proportional to the respective observed electromotive forces.

The error in the result due to the fact that the flux is not exactly proportional to ampere-turns may be reduced indefinitely by making the auxiliary coil give approximately the same degree of field excitation as that produced by the given field winding of the machine. To this end, provision should be made for securing as large a field excitation as is conveniently possible in the

auxiliary field winding and the current in the given field winding should be reduced below its normal value so that the two field excitations may be nearly equal. It is easiest to make the auxiliary field winding of fairly coarse wire so that the available space may be filled by comparatively few turns, and the current in the auxiliary winding should be made as large as the winding will stand without overheating in the few seconds required for the observation of the voltage of the machine.

If the dynamo to be tested has a multipolar field magnet, care must be taken to place the same number of auxiliary turns on each field pole or core, and to properly connect the turns on the several poles.

Apparatus. — The machine to be tested may be, perhaps, most conveniently driven by a motor. A suitable rheostat and ammeter are connected in circuit with the given field winding to the supply mains, a suitable rheostat and ammeter are connected in circuit with the auxiliary field winding to the supply mains, and a suitable voltmeter is connected across the brushes of the given machine. A revolution counter is required for the determination of speed.

Work to be done. — 1. Place the auxiliary winding on the given machine and record the number of turns on each field core. Then start the machine and take the following observations.

2. Close the circuit of the auxiliary field winding, adjust the rheostat in this circuit to give the largest permissible current, and observe current in auxiliary winding, voltage across brushes, and speed. Open the field circuit as soon as possible after these observations including speed, have been taken.

3. Close the circuit of the given field winding, adjust the rheostat in this circuit until the voltage across the brushes is nearly the same as in (2), and observe current in given field winding, voltage across brushes, and speed.

4. Reverse the current in one or the other of the two field windings so that the auxiliary winding opposes the given wind-

ing, then close both field circuits, adjust one or the other of the rheostats until the voltage across the brushes is zero, and observe both field currents.

Report. — Calculate the number of turns of wire in the given field winding: (*a*) From observations (2) and (3) above, and (*b*) from observations (4) above. State whether the result is turns per field pole, turns per magnetic circuit, or total turns.

Experiment 34.

NO-LOAD AND FULL-LOAD MAGNETIZATION CURVES. A STUDY OF COMPOUNDING.

The object of this experiment is to study the general conditions which underlie the compounding of a generator.

Theory. — The no-load magnetization curve, or as it is generally called, simply, the magnetization curve, of a dynamo is discussed in Experiments 8 and 9. The full-load magnetization curve shows the relation between the field current (abscissas) and the terminal voltage (ordinates) of a generator driven at constant speed and delivering its full-load current output.

The no-load and full-load magnetization curves of a dynamo involve the data from which any degree of compounding of the machine as a generator may be calculated. In this connection it must be remembered however that the voltage at the brushes of a compound generator must exceed its terminal voltage by an amount equal to the RI drop in the series field winding. The resistance of the series field coil is here to be considered as known.

The curve, A, Fig. 29, is the no-load magnetization curve of a generator, the curve, B, is its full-load magnetization curve, and C is a curve the distance of which below B represents the RI drop in the series field coil with full-load current. Let it be required to examine into the relations involved in say, 10 per cent. over-compounding of the given generator. The zero-load voltage is represented by OE and the desired full-load voltage by OE'. The straight line, OD, drawn through the point, p, is the line

whose ordinates represent voltage across the terminals of the shunt field winding and whose abscissas represent the corresponding values of shunt field current. To get a terminal voltage OE' of the compound generator at full load, the voltage across the brushes must be equal to cd, and the total ampere-turns of

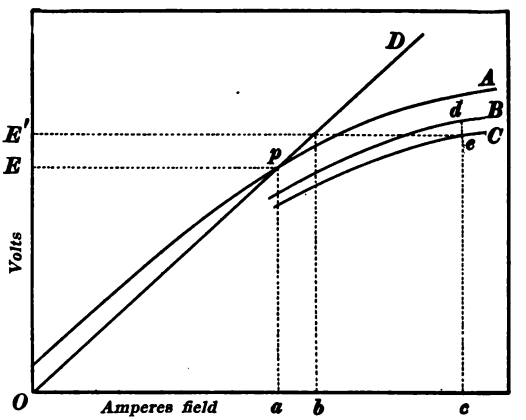

Fig. 29.

field excitation must be that which would be produced by a shunt current, Oc. The actual shunt field current would, however be Ob, so that the series field winding would have to supply an amount of excitation equal to the excitation produced by a current equal to bc in the shunt field winding. These statements apply to the long-shunt connection of the shunt field winding. The student may easily modify the diagram for the short-shunt connection.

Apparatus. — A shunt generator is driven at constant speed ith its field, preferably, separately excited. A suitable rheostat arranged for controlling the field current and a suitable amer for measuring it (see Experiment 9). A suitable voltmeter ected across the generator terminals, and the generator s are connected through a switch and a suitable ammeter tat which is to serve as a full-load receiving circuit.

Work to be done. — 1. Determine the no-load magnetization curve of the generator as explained in Experiment 9, carrying the field current considerably above normal.

2. Take simultaneous sets of readings of field current, current output, terminal voltage, and speed for a series of values of field current ranging from zero to a value about 50 per cent. in excess of normal value, keeping current output as nearly as possible at its full-load value, and keeping speed as nearly as possible constant.

3. Determine the number of turns in the shunt field winding. See Experiment 33.

Report. — 1. Plot the no-load and full-load magnetization curves of the machine on the same sheet.

2. Plot the curve, *C*, Fig. 29, assuming an *RI* drop in the series coil equal to ½ of one per cent. of the rated voltage of the generator.

3. Calculate the number of series turns required for flat-compounding of the generator, at its rated voltage.

4. Calculate tne number of series turns required for 10 per cent. over-compounding of the machine: (*a*) When the no-load voltage is normal, and (*b*) when the no-load voltage is ⅔ of normal value.

Experiment 35.

DETERMINATION OF LENGTH OF AIR GAP.

The object of this experiment is to determine the radial length of the air gap between pole face and armature core of a dynamo, from electrical measurements.

Theory. — The reluctance of the iron part of the magnetic circuit of a dynamo is usually much less than the reluctance of the air gaps, and if the iron is far below magnetic saturation its reluctance is negligible in comparison with the reluctance of the air gaps. Therefore, at low degrees of saturation of the iron parts, the magnetomotive force of the field winding of a dynamo is

nearly all used in overcoming the reluctance of the air gaps, so that the reluctance of the air gaps may be determined by finding the armature flux Φ produced by a known magnetomotive force of field excitation, and then the radial length of the air gap may be calculated if its sectional area is known.

From the well known relation, flux is equal to magnetomotive force divided by reluctance, we have, ignoring the reluctance of the iron parts:

$$\Phi = \frac{4\pi NIs}{20l} \tag{1}$$

in which Φ is the magnetic flux passing from one pole face into the armature, N is the number of field turns per pair of poles, I is the field current, s is the sectional area of the air gap in square centimeters (area of a pole face), and l is the radial length of the air gap in centimeters.

From the fundamental equation of the dynamo we have:

$$E_a = \frac{p\Phi Zn}{p' \times 10^8} \tag{2}$$

in which E_a is the electromotive force induced in the armature, Z is the number of armature inductors, n is the speed in revolutions per second, p is the number of field magnet poles, and p' is the number of paths in parallel in the armature winding.

Therefore, eliminating Φ from (1) and (2) and solving for l, we have:

$$l = \frac{0.628}{10^8} \cdot \frac{NIsZnp}{E_a p'} . \tag{3}$$

The value of l calculated by this equation is always too large on account of the fact that the reluctance of the iron part of the magnetic circuit is not zero. This error is least when the degree of saturation of the iron is small, but when the degree of saturation is small (small field excitation) the residual magnetism becomes a disturbing element. The error due to residual magnetism may be reduced to the least possible value by proceeding as

follows: Determine the no-load magnetization curve of the generator for a complete cycle of values of field current. The magnetization curve so found is a hysteresis loop as shown in Fig. 30. And the straight line AB, drawn from the origin parallel to the sides of the loop where they cross the axis of abscissas, is the nearest approximation that can be made to an ideal magnetization curve unaffected by residual magnetism and not curved by the effects of magnetic saturation. The abscissa of any point, p, may be taken as the value of I in equation (3) and the ordinate of p as the value of E_a.

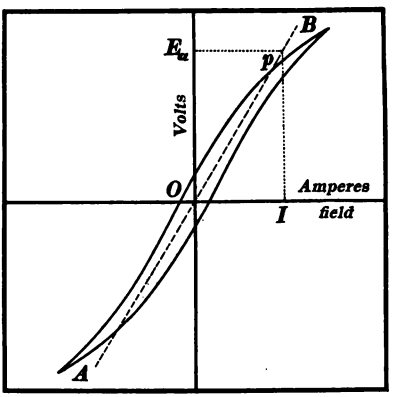

Fig. 30.

Apparatus. — Arrange a generator for the determination of its no-load magnetization curve as explained in Experiment 9, adding a reversing switch so as to be able easily to reverse the field current.

Work to be done. — 1. Take simultaneous sets of readings of field current, armature voltage and speed for a complete cycle of values of field current. That is, start with full value of field current and reduce in steps to zero, throw the reversing switch and increase the reversed field current in steps to its full value. Then reduce the field current in steps to zero, throw the reversing switch, and increase the field current, which is now in the original direction, to its full value.

2. Secure the data as to number of field turns, number of armature inductors, and type of armature winding.

3. Measure the area of one of the pole faces.

4. Record the number of field poles.

Report. 1. Plot the complete magnetization curve and draw the line, AB, Fig. 30.

2. Calculate the length of the air gap and express the result in centimeters and in inches.

Experiment 36.

DETERMINATION OF MAGNETIZATION CURVE BY TORQUE OBSERVATIONS.

The magnetization curve of a dynamo is generally determined by the methods described in Experiments 9 and 34. The magnetization curve of a machine with load may be determined indirectly for any prescribed speed by observing the torque and field current at stand-still with a given value of armature current.

Theory. Let T be the torque in pound-feet exerted by the field magnet on the armature for given values of field current and armature current. If it were not for friction losses, including eddy current loss and hysteresis loss, a torque equal to T would suffice to drive the armature at any speed, n, in spite of the opposing torque exerted on the armature by the field magnet, so that the mechanical power which is converted in the armature into electrical power is $2\pi nT$ foot-pounds per second or $8.42\ nT$ watts where n is the speed in revolutions per second. But the electrical power developed in the armature is $E_a I_a$ watts so that $E_a I_a = 8.42\ nT$ or

$$E_a = \frac{8.42nT}{I_a}. \qquad (1)$$

If the torque T exerted on the armature by the field magnet be observed, say, at standstill, for given values of field current and armature current, I_a, then one can calculate by equation (1) the voltage, E_a, which would be induced in the armature of the machine at a prescribed speed, n, for the given values of field current and armature current. In this way, by varying the field current, one may obtain data for the plotting of the magnetization curve of the machine at any given speed and with given armature current.

From the data obtained in this experiment it is interesting to calculate also the values of the armature flux, Φ, corresponding to various values of field current. For this purpose the value of E_a in terms of Φ may be substituted in equation (1) from the fundamental equation of the dynamo, namely:

$$E_a = \frac{p\Phi Zn}{p' \times 10^8} \tag{2}$$

and the resulting equation solved for Φ, giving:

$$\Phi = \frac{8.42\, p' T \times 10^8}{pZI_a}. \tag{3}$$

The values of torque may be determined by clamping an arm fast to the dynamo pulley and applying a spring dynamometer to this arm at a measured distance, r, from the center of the pulley, the spring dynamometer being held so that its axis is at right angles to r.

The dynamometer readings must be corrected for the unbalanced weight of the arm and the observations must be arranged so as to eliminate as nearly as possible the errors due to journal and brush friction.

Errors due to journal and brush friction are to be eliminated as follows: — Fix a reference point opposite to the end of the arm and always take duplicate readings of the dynamometer "Up" and "Down," that is, (*a*) while the arm is being raised slowly past the reference point, and (*b*) while the arm is being lowered slowly past the reference point. The mean of these two readings is nearly free from errors due to friction.

The correction to be applied to the dynamometer readings to allow for the unbalanced weight of the arm may be determined by taking the "Up" and "Down" readings of the dynamometer when no current is flowing either through the field or armature of the machine. The mean, M, of these two readings gives the dynamometer reading due to the unbalanced weight of the arm.

The final corrected value of the dynamometer reading for given values of field and armature currents is obtained by subtracting M from the mean of the "Up" and "Down" readings of the dynamometer obtained with the given values of field and armature currents.

Apparatus. — Clamp an arm fast to the pulley of a dynamo and arrange a spring dynamometer for measuring torque as explained above. Connect the field winding as in Experiment 9, and supply a constant current to the armature through a suitable rheostat, and suitable ammeter.

Work to be done. — 1. Adjust the armature current to the full-load value and take "Up" and "Down" readings of the dynamometer for a series of values of field current ranging from zero value to, say, 50 per cent. above normal value. The armature current should be recorded each time inasmuch as the torque which is derived from the dynamometer readings can be easily corrected for variations of armature current. Enter these observations in Form 36.

No.	Observed.				Calculated.		
	Arm. Amp.	Field Amp.	"Up" Reading	"Down" Reading	Torque	Φ.	E.M.F.

Form 36.

2. Determine the correction which must be subtracted from the dynamomoter readings to allow for unbalanced weight of arm.

3. Obtain the following data: (*a*) Number of armature inductors, (*b*) number of field poles, (*c*) number of paths in parallel in the armature winding, (*d*) normal speed of the machine, and (*e*) radial length of arm.

eport.—1. Calculate the value of the torque corresponding to value of field current and for full-load current in the tre.

2. Calculate the armature flux Φ for each value of the field current.

3. Calculate the electromotive force induced in the armature at normal speed for each value of the field current, with full-load armature current.

4. Plot two curves on one sheet using values of field current as abscissas and corresponding values of Φ and E_a as ordinates.

Experiment 37.

INDIRECT STUDY OF CUMULATIVE AND DIFFERENTIAL COMPOUND MOTORS.

The object of this experiment is to study the speed characteristics of compound motors indirectly by observing torque at stand-still, the effect of cumulative compounding being produced by giving the brushes of the machine a forward lead, and the effect of differential compounding being produced by giving the brushes a backward lead.

Theory. — If a shunt motor were to be driven with its brushes having a considerable forward lead, the armature current would tend to help the shunt field winding in the production of flux, and therefore the increase of armature current with increase of motor load would cause the armature to act like a series field winding arranged to help the shunt field winding (cumulative compounding). On the other hand, if the motor brushes be given a considerable backward lead the armature current would oppose the magnetizing action of the shunt field winding, and therefore the increase of armature current with increase of motor load would cause the armature to act like a series field winding arranged to oppose the shunt field winding (differential compounding).

When the brushes of a shunt motor are given a considerable lead forwards or backwards the machine tends to spark viciously, and the zero-load speed of the machine is increased with given field excitation and armature voltage. The speed-characteristics of the machine would be however exactly those of a cumu-

lative or differential compound motor as the case may be. The object of this experiment is to determine these speed-characteristics indirectly as follows:

When the brushes of a dynamo are given a lead forwards or backwards the electromotive force between the brushes for any given speed and flux is decreased. It is legitimate to look upon this decrease as due to a decrease of effective armature flux inasmuch as the armature flux in the central parts only of the pole pieces remains effective. Let Φ represent this effective armature flux and let E_a be the electromotive force induced in the armature winding between the brushes, at speed n. Then

$$E_a = \frac{p\Phi Zn}{p' \times 10^8} \tag{1}$$

where p, Z, n and p' have the same meanings as in equation (2), Experiment 36.

Let T be the torque exerted by the field magnet upon the armature when the brushes have given lead forwards or backwards, and when the field current and armature are given. If the machine were to run at n revolutions per second this torque would develop an amount of power equal to $8.42\ nT$ watts, T being expressed in pound-feet. This mechanical power developed in the armature of a motor is equal to the electrical power, $E_x I_a$, delivered to the armature minus $R_a I_a^2$ loss in the armature, therefore:

$$8.42nT = E_x I_a - R_a I_a^2$$

or

$$n = \frac{(E_x - R_a I_a) I_a}{8.42T} \tag{2}$$

from which equation the speed of the motor when loaded so as to take I_a amperes in its armature circuit from supply mains across which the voltage is E_x, may be calculated. The torque in equa- (2) is expressed in pound-feet and the speed in revolutions :ond.

Equation (2) ignores the stray power loss in the motor; it gives, however, an accurate value of the speed, n, at which the motor would run, for the given values of E_x and I_a, but the available torque at the motor pulley would be less than the torque, T, measured at stand-still.

Apparatus. — Choose a motor of which the rocker arm is adjustable so that the brushes may be given a considerable lead forwards or backwards from the neutral axis. Arrange the apparatus exactly, as described in Experiment 36, the ammeter in the field circuit may be omitted, however, if one is sure that the field current remains constant during the test and gives normal field excitation.

Work to be done. — 1. Before clamping the arm fast to the motor pulley, start the motor from supply mains of which the voltage is normal for the motor, and with the armature rheostat all cut out adjust the field rheostat until the speed of the motor is normal with the brushes in the neutral axis. The field excitation is then normal and the field rheostat is to be left untouched during the following tests.

2. Clamp the arm fast to the motor pulley, give the brushes a forward lead of, say, 40 electrical degrees and take sets of simultaneous readings of spring dynamometer ("up" and "down") and of armature ammeter for a series of values of armature current ranging from nearly zero to a value considerably in excess of normal value.

3. Give the brushes a backward lead of 40 electrical degrees and repeat (2).

4. Take the dynamometer readings for finding the correction to be applied on account of the unbalanced arm as explained in Experiment 36.

5. Measure the supply voltage, E_x.

6. Measure the armature resistance, R_a, by a suitable method, and measure the length of the arm.

Report. — 1. Calculate the torque, T, corresponding to each set of dynamometer readings taken in (2) and (3) above, and calculate the value of n for each set of readings using equation (2). Tabulate these calculated values in Form 37.

No.	Observed				Calculated	
	Armature Amperes	Field Amperes	"Up" Reading	"Down" Reading	Torque Pound-feet.	Speed Rev. per Sec.

Form 37.

2. Plot two curves on the same sheet using values of I_a as abscissas and corresponding values of n and T as ordinates: (*a*) For the case in which the brushes have a forward lead, and (*b*) for the case in which the brushes have a backward lead.

Experiment 38.

VARIATION OF STRAY POWER LOSS WITH SPEED.

The object of this experiment is to determine the variation of the stray power loss of a series or shunt dynamo with speed, the armature flux being constant.

Theory. — The stray power loss, S, of a dynamo consists of three parts, namely, (*a*) the loss, W_f, due to journal, brush, and air friction and to the fan-like action of the armature, (*b*) the hysteresis loss, W_h, in the armature core due to reversals of magnetization, and (*c*) the eddy current loss, W_e, in the armature core. All of these parts of the stray power loss increase with the speed; W_f increases approximately in proportion to the speed ·f the fan-like action of the armature is small, W_h increases quite ırately in proportion to the speed, and W_e increases quite ıtely in proportion to the square of the speed, armature ·ing constant. The total stray power loss of a given

machine for given armature flux is a fairly well defined function of the speed, and the total stray power loss may be represented with sufficient accuracy for most purposes by the equation:

$$S = an^x \qquad (1)$$

in which S is the total stray power loss, n is the speed, and the coefficient, a, and exponent, x are constants. It is the object of this experiment to determine the values of a and x for a given dynamo at given field excitation.

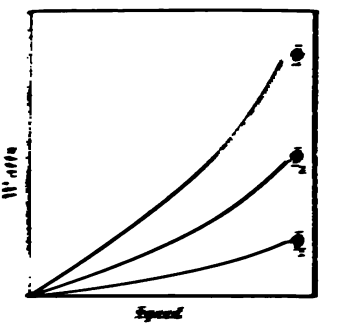

Fig. 31.

Typical curves showing the variation of stray power loss S with speed for several values of armature flux, Φ_1, Φ_2 and Φ_3, are shown in Fig. 31. When curves of this kind have been determined the values of a and x, see equation (1) above, for each curve may be determined as follows: Given a curve of stray power loss and speed. Find the logarithm of abscissa and ordinate of each point on the curve and plot a series of points shown by the small crosses in Fig. 32, of which the abscissas are the values of $\log n$ and the ordinates are the corresponding values of $\log S$. If there were no errors in the observations and if equation (1) were exact these points would lie on a straight line, therefore a straight line ip which passes as nearly as possible to all of the points is the best approximation to the true locus of the plotted points in Fig. 32. The value of the coefficient a in equation (1) above, is represented by the intercept of the line ip on the axis of ordinates (axis of $\log S$) and the value of the

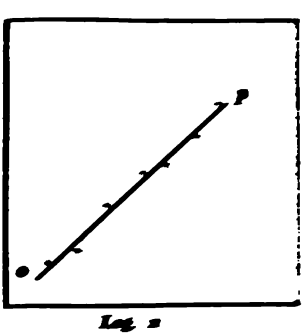

Fig. 32.

exponent, x, is represented by the tangent of the angle between op and the axis of abscissas.

Apparatus. — Connect a shunt dynamo for running as a motor at zero load. Connect a suitable ammeter and a rheostat in the field circuit, a suitable ammeter and a rheostat in the armature circuit, and connect a suitable voltmeter across the armature terminals of the machine.

Before beginning the test, the brushes of the machine should be carefully adjusted, a trace of vaselene should be rubbed on the commutator, and the bearings of the armature shaft should be freshly oiled so that the friction losses may be as steady as possible during the test.

In order that the rheostat in the armature circuit may be capable of reducing the voltage across the armature to any desirable low value, a suitable shunt may be arranged around the armature and the ammeter which indicates the armature current, so as to increase the current in the rheostat.

Work to be done. — 1. Keeping the field current constant run the machine as a motor without load and observe sets of simultaneous readings of armature current, voltage across armature terminals, speed and field current, for a series of values of voltage across armature terminals ranging from nearly zero to as high a value as is obtainable or as high as may be without causing the motor speed to become excessive.

Enter these observations in form 38.

Number	Observed				Calculated				
	Arm. Amp.	Field Amp.	Volts across Arm.	Speed	Watts Input	RI^2 Loss	S in Watts	Log. S	Log. n

Form 38.

2. Repeat (1) with armature flux about 25 per cent. above normal (speed 25 per cent. below normal with normal voltage across the armature terminals), and again with the armature flux about 25 per cent. below normal.

3. Measure the resistance of the armature by a suitable method.

Report. — 1. Plot three curves on one sheet using stray power losses as ordinates and speeds as abscissas.

2. Make three plots all on one sheet similar to Fig. 32 showing values of *log n* as abscissas and the corresponding values of *log S* as ordinates, and determine the values of the constants a and x for each of the three degrees of field excitation employed in the test.

3. Having determined the three sets of values of a and x plot the three equations ($S = an^x$) on the same sheet as that used in (1) above, representing the values of n as abscissas and the values of S, calculated of course, as ordinates.

4. If there is any systematic difference between curves (1) and curves (3) explain it.

Experiment 39.

VARIATION OF STRAY POWER LOSS WITH FLUX.

The object of this experiment is to determine the variation of the stray power loss of a series or shunt dynamo with armature flux, the speed of the machine being kept constant

Theory. — At constant speed the three parts, W_f, W_h and W_e, of the stray power loss, see Experiment 38, vary with the armature flux, Φ, as follows: W_f is independent or nearly independent of Φ, W_h is proportional to something like the 1.6 power of Φ, and W_e is proportional to Φ^2; and the total stray power loss may be expressed with a fair degree of accuracy by the equation:

$$S = a\Phi^x + W_f \qquad (1)$$

in which a and x are constants the determination of which is the object of this experiment.

Typical curves showing the variation of stray power loss with armature flux, speed being constant, are shown in Fig. 33. The ordinates of each of these curves for $\Phi = 0$, which can be determined only by extending the curves beyond the region of observation, represent the values of W_f at the respective speeds. Therefore, knowing the value of W_f we know the values of $S' - W_f$ $(= a\Phi^x)$, and the values of a and x may be determined by plotting values of log $(S' - W_f)$ and log Φ, drawing a straight line as near as possible to all of these plotted points, and proceeding in a manner similar to that described in Experiment 38 and illustrated in Fig. 3.

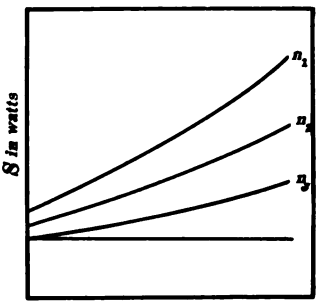

Fig. 33.

Apparatus. — The arrangement of the apparatus for this experiment is exactly the same as for Experiment 38 except that the field rheostat must have a high resistance so that the field excitation may be reduced to very low values at will.

The same precaution as to brush and journal friction is necessary as in Experiment 38.

Work to be done. — 1. Take sets of simultaneous values of armature current, voltage across armature terminals, field current, and speed for a series of values of field current ranging from a value about 25 per cent. in excess of normal value to nearly zero, the speed being adjusted as nearly as possible to the normal value before each set of readings by adjusting the armature rheostat.

2. Repeat (1) with the speed about 25 per cent. above normal, and again with the speed about 25 per cent. below normal.

3. Measure the armature resistance by a suitable method.

Report. — 1. Plot the values of stray power loss as ordinates and the corresponding values of Φ as abscissas. The values of

delivered to its armature minus the RI^2 loss in its armature minus its stray power loss. If the motor drives the given machine by belt, then an indeterminate amount of power is lost in the belt and by increased journal friction due to the tension of the belt. It is best, therefore, to connect the driving motor to the given machine by a coupling if it is possible to do so.

(*a*) The given machine is driven at normal speed with field unexcited and brushes lifted from the commutator. The power now required for driving is the sum of journal friction and air friction losses. (*b*) If the brushes be now put into position the power required for driving will be increased by the brush friction losses, and then if the field of the machine be normally excited the power required for driving will be further increased by the amount of the eddy current and hysteresis losses, provided the journal friction is not perceptibly increased by a possible sidewise pull of the field magnet upon the armature, and provided there are no short-circuit currents through the brush connections due to unbalanced or unequal electromotive forces between the different brush sets.

The power loss due to short-circuit currents through the brush connections, which, in a properly constructed machine, is nearly eliminated by symmetry of field magnet and armature winding, and proper location of the brushes, is of course a real component, of stray power loss and it may be separated from the other stray power losses by driving the machine under a third condition, namely, (*c*) with field normally excited and brushes off. The power required for driving in this case is less than the power required in case (*b*) by the sum of brush friction and short-circuit current losses, and, brush friction loss being previously deter-
ined, the short-circuit current losses are known.

increase of journal friction due to a possible side pull of
magnet upon the armature, is generally very small and
separated from eddy current and hysteresis losses.
to arrange the test so that all of the readings with
are taken first and all of the readings with brushes

off are taken afterwards inasmuch as it is scarcely possible to adjust the tension of the brush springs twice alike.

The power rating of the driving motor should be about equal to or but little greater than the total stray power loss of the machine under test, because a large driving motor would have a large stray power loss and inasmuch as this stray power loss must be subtracted from the motor input in finding the motor output, as explained above, a large stray power loss in the motor, inaccurately determined as it must be, would introduce a large error in the result.

The driving motor may of course be driven far above or far below its rated speed if necessary, provided its stray power loss is determined under the same conditions.

Apparatus. — The machine to be tested is arranged to be driven by a fairly small motor, preferably directly coupled to the machine. The motor field is separately connected to the supply mains through a field rheostat. The motor armature is connected to the supply mains through a suitable ammeter and a rheostat capable of carrying the armature current steadily without overheating. A suitable voltmeter is connected across the motor armature.

The machine to be tested has its field winding connected through a field rheostat to supply mains, and a voltmeter is connected across the armature terminals of the machine to show when the field excitation of the machine is normal, which is indicated by normal voltage at normal speed.

The brushes of the machine should be adjusted to the proper tension (about 1½ lbs. per square inch of brush contact area for carbon brushes), the commutator should be cleaned and rubbed with a cloth on which is a mere trace of vaseline, and the bearings should be aligned and properly oiled, in order that the friction losses may be normal.

Work to be done. — 1. Start the motor and bring the machine under test to a speed slightly above its normal speed by ope-

rating the field rheostat of the motor, field magnet of machine being excited and brushes in position. The motor field rheostat is to be left untouched throughout the remainder of the test and all speed control is to be accomplished by adjustment of the rheostat which is in series with the motor armature. In fact an ammeter should be connected in the motor field circuit to detect any change of motor field current due to rise of temperature or other cause.

2. Adjust the speed of the given machine to its normal value and take simultaneous readings of armature current and armature voltage of the driving motor, and speed and terminal voltage of the machine under test, under each of the following conditions :

(*a*) With brushes down and field of machine unexcited.

(*b*) With brushes down and in the neutral axis, and field excited to give normal terminal voltage.

(*c*) With brushes up and field normally excited.

(*d*) With brushes up and field unexcited.

(*e*) With belt off, or motor disconnected from the machine under test.

From readings (*e*) the stray power loss of the motor is to be determined, and then the various parts of the stray power loss of the machine under test are to be determined as explained above under Theory.

3. Measure the resistance of the armature of the driving motor by a suitable method.

Report. — Calculate the component parts of the stray power loss of the given machine at normal speed and field excitation and at zero load, including the loss due to short-circuit currents under the brushes and through the brush connections.

Experiment 41.

OPERATION OF A CONSTANT-CURRENT ARC-LIGHTING GENERATOR.

The object of this experiment is to study the operation and regulation of a constant-current arc-lighting generator ermine its operation characteristics.

Theory. — Direct current generators of the constant-current type have been extensively used for arc-lighting. Such a machine must be arranged so that any slight increase of current due to a decrease of resistance of the receiving circuit causes the terminal voltage of the machine to be automatically decreased so as to keep the current sensibly constant. The maximum variation of the current from the prescribed normal value expressed as a percentage of the normal value is adopted as the measure of the degree of regulation of such a machine.

The maintenance of a constant-current output is accomplished in some commercial arc-lighting machines by a device which automatically shifts the brushes and thereby varies the voltage of the machine, another commercial machine is regulated by

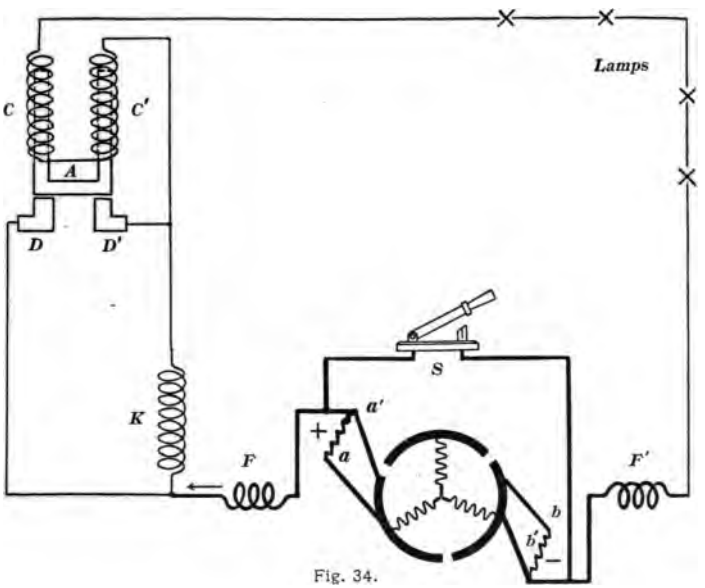

Fig. 34.

automatic variations of field excitation, and still another depends upon excessive armature reaction. Some arc-lighting generators have armatures of the open-coil type and others have closed-coil armature windings.

The Thomson-Houston arc machine will serve as an example. This machine has an open-coil armature winding and constant current regulation is accomplished by the shifting of the brushes. The arrangement of this machine is shown in Fig. 34. There are two positive brushes, *aa'*, and two negative brushes, *bb'*. When the current output rises above normal value it lifts the armature, *A*, of an electromagnet, *CC*, which is called the controller. The points, *D* and *D*, thus become electrically disconnected from each other so that the current delivered by the machine flows through the coil, *K*, which pulls a plunger and actuates a system of levers which shifts the brushes; *a* and *b* are shifted forwards and *a'* and *b'* backwards, and this lowers the available voltage of the machine and so lowers the current. The two field coils of the machine, *F* and *F'*, are connected as shown and a switch, *S*, serves to short-circuit the armature when it is desired to make the machine inoperative.

Apparatus. — An arc lighting generator is driven at constant speed and connected to its circuit of lamps or to several rheostats in series. An ammeter is connected in the circuit and a suitable voltmeter is connected across the generator terminals. High resistance water rheostats are perhaps the most convenient to use.

Work to be done. — Take sets of simultaneous readings of current and terminal voltage for a series of values of resistance in the receiving circuit ranging from that value of resistance which represents normal full load on the machine to nearly zero. If lamps are used they are to be short-circuited one after another.

Caution. — It is dangerous to open the circuit of a high voltage arc machine. If it is desired to render the machine quickly inoperative short circuit its armature. If it is desired to cut out lamps do so by short-circuiting them one by one.

Report. — 1. Calculate the resistance of the receiving circuit for each pair of readings of current and voltage and plot a curve of which abscissas represent values of receiving circuit resistance, and ordinates represent amperes output.

2. Plot a curve of which abscissas represent amperes output and ordinates corresponding values of terminal voltage.

3. From the maximum deviation of the current output from its normal value calculate the percentage regulation of the machine.

Experiment 42.

THE OPERATION OF SHUNT GENERATORS IN PARALLEL.

In nearly all modern power stations generators are operated in parallel. The object of this experiment is to study the operation of shunt generators in parallel.

Theory. — When two or more generators are to operate in parallel they are usually arranged to deliver current to a pair of large conductors, called bus bars, which carry the current to the points of attachment of the feeders which in turn deliver the current to the receiving circuits.

If one or more generators are in operation, delivering current to the bus bars, and if it is desired to start up another generator, B, and connect it to the bus bars, the voltage of B must be made equal to the bus-bar voltage and it may then be connected to the bus bars, the positive terminal of B being connected to the positive bus bar.

The sharing of load equally by shunt generators operating in parallel may be brought about at a particular load, say full-load, by adjusting the field rheostats of the machines, and when this has been done the generators should share a reduced load properly without further manipulation of the field rheostats. This will not be the case, however, if the characteristics of the machines are not alike or if the speed of one machine fluctuates relative to the speed of the other. It is the object of this experiment to study the unequal sharing of a reduced total load by two machines which have been adjusted to share full load equally (or in proportion to their ratings). This study is most instructive when both machines are driven at constant speed and when the machines are unlike in design or in rating or both.

Apparatus. — A shunt generator, G', is started, brought up to its rated voltage and connected to a receiving circuit through a suitable ammeter, A'. Another shunt generator, G'', unlike the first is then started, brought up to a voltage equal to the terminal voltage of the first and then properly connected to the same receiving circuit through a suitable ammeter, A''. The diagram of connections is shown in Fig. 35. This diagram does not show

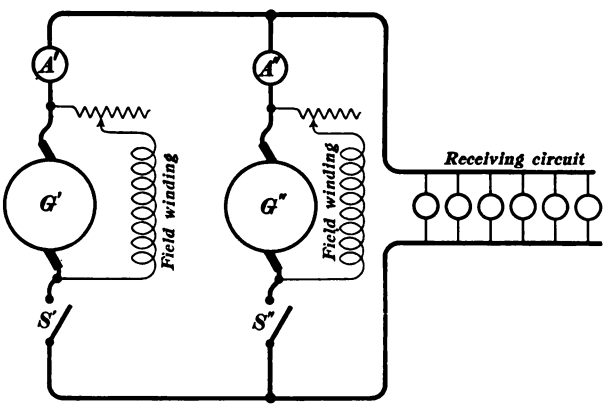

Fig. 35.

the voltmeter, which should be provided with long flexible leads with terminals which can be touched to any two points between which the voltage is to be determined. A suitable rheostat is of course used as a receiving circuit.

Caution. — It is of the utmost importance that the voltage of the second generator be right in value and right in direction before it is connected in parallel with the first.

Work to be done. — 1. After having started the two generators as explained above adjust the resistance of the receiving circuit and the shunt field rheostat of the second machine, G'', until both machines are at full load, then, without altering the field excitation of either machine, increase the resistance of the receiving circuit and thus reduce the total load to zero in steps, taking sets of simultaneous readings of volts across the terminals, amperes

output and speed of each machine. The speeds should be kept as nearly constant as possible because it is not feasible to make corrections for variations of speed.

Report. — 1. Determine the total current delivered to the receiving circuit from each set of readings taken. Plot two curves of which the abscissas represent total amperes in receiving circuit and of which the ordinates represent amperes output of the respective machines, and plot another curve on the same sheet with the same abscissas and with terminal voltages as ordinates.

2. Plot on a second sheet the external characteristics of both machines, using amperes output of respective machines as abscissas and corresponding terminal voltages as ordinates.

Experiment 43.

THE OPERATION OF COMPOUND GENERATORS IN PARALLEL.

The object of this experiment is to study the operation of compound generators in parallel.

Theory. — Given two or more generators, over-compounded generators for example, of which the voltages increase with increase of current output. Such machines cannot be operated in parallel unless some special arrangement is provided to prevent the tendency for the load to be all taken by one machine. This tendency may be explained as follows: Imagine two over-compound generators operating in parallel and sharing a total load properly. If anything should cause one of the machines to take momentarily more than its share of the load, its voltage would rise above that of the other machine, since it is understood to be over-compounded, and it would not only take a larger and larger share of the load until it supplied the whole of the current to the receiving circuit, but also it would deliver current to the other machine and drive it as a motor.

This complete instability of over-compounded generators in parallel does not exist in generators that are not over-compounded, but the effect of compounding is to exaggerate greatly the un-

equal sharing of total load which would exist even if the series field windings of the machines were cut out and the machines operated as shunt machines. Therefore the series field windings of compound generators which are to be operated in parallel must be arranged as shown in Fig. 36. This figure shows the two

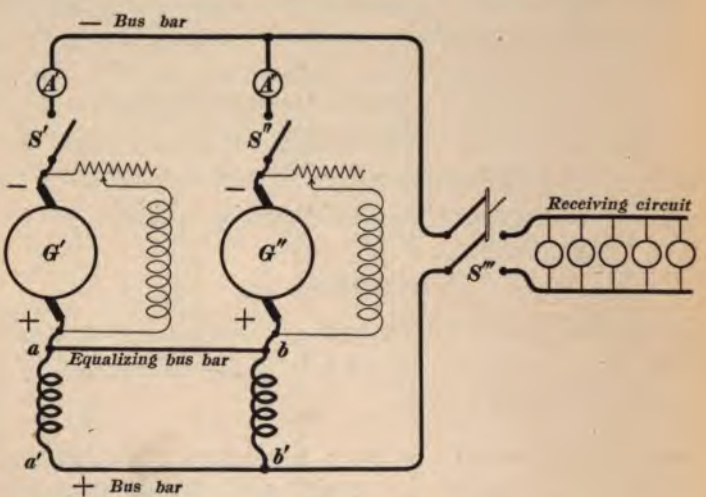

FIG. 36.

series field windings, aa' and bb', connected in parallel with each other independently of the connection in parallel of the armatures, G' and G'' of the two generators, by the use of what is called an equalizing bus bar.

The satisfactory operation of two or more compound generators in parallel depends first of all upon the use of the equalizing bus bar and it depends further upon : (*a*) The adjustment of the machines to the same zero-load voltage, and (*b*) The adjustment of the machines to the same degree of over-compounding. The former is accomplished by the adjustment of the shunt field rheostats of the machines, and after this adjustment has been made, the second condition, the fulfillment of which is indicated by the proper sharing of full-load output, is accomplished by inserting resistance in circuit with the series field winding of that machine which has

a greater degree of over-compounding than the other. The effect of this inserted resistance is to cause less current to flow through the series field winding of the one machine and more current to flow through the series field winding of the other machine. It is to be particularly noted that the relative degree of over-compounding of two generators which have their series field coils connected in parallel, cannot be changed by connecting a shunt across either series field winding.

Even when all of these conditions are satisfied and the machines are driven at constant speed, intermediate loads between zero load and full station load are not shared by the machines in exactly the desired proportions. The object of this experiment, beyond the important experience obtained in the arrangement and handling of the apparatus, is to study the unequal sharing of a reduced load by machines which have been adjusted as explained above.

Usually, all of the series field windings of a set of compound generators which are operated in parallel are left in circuit with all of their connections intact so that the current output of the station is divided among all of the series field windings whether all of the generators are operating or not.

When a compound generator, G'', Fig. 36, is to be put into service in parallel with another or others already in operation, it is started, its field rheostat is adjusted until its voltage is equal to the bus-bar voltage, then, being sure that the voltage of the machine is in the proper direction, the switch, S'', is closed, and finally the shunt field rheostat of G'' or of G' (or of both) is adjusted to equalize the load between the two machines.

Apparatus. — The arrangement of the apparatus is shown in Fig. 36. This figure does not, however, show the voltmeter which should be provided with long leads with terminals that can be touched to any two points between which the voltage is to be determined. A suitable rheostat is of course used as a receiving circuit.

Work to be done. — 1. Having the switches, S', S'', and S''', Fig. 36, open, start up generator, G' and close S'. Then start up G'', adjust the field rheostat of G'' (or of G') until the voltage of G'' is the same as the voltage across the bus bars then, being sure that the polarities of the machines are as indicated in Fig. 36, close the switch, S''. The two conditions as to direction and value of the voltage of the second machine may be tested at once by observing the voltage across the open switch, S'', and if this voltage is zero the switch may be closed.

Then close the switch, S''', and adjust: (*a*) The resistance of the receiving circuit, and (*b*) a variable resistance in the circuit of one or other of the series field windings, until each machine is delivering its full-load current. The two adjustments, *a* and *b*, have to be made simultaneously if it is found that one machine tends to take an excessive overload before the other machine reaches its full load.

2. Take sets of simultaneous readings of amperes output of each machine, speed of each machine, and voltage across bus bars, increasing the resistance of the receiving circuit step by step until the total current output is reduced from the value which corresponds to full load on both machines, to zero.

Report. — 1. Calculate the value of the total receiving circuit current for each set of readings. Plot two curves of which the abscissas represent total amperes in receiving circuit and of which the ordinates represent amperes output of the respective machines, and plot another curve on the same sheet with the same abscissas and with terminal voltages as ordinates.

2. Plot on a second sheet the external characteristics of the two machines using amperes outputs of respective machines as abscissas and terminal voltages as ordinates.

Experiments 44 and 45.

PUMPING BACK METHOD OF LOADING MACHINES.

In making tests on generators or motors at full load, the power required is often more than is conveniently available and the cost

of the power is often an important item. In the pumping back method of loading, a generator is loaded by allowing it to supply current to a motor the mechanical power developed by which helps to drive the generator. In this case the only power that must be supplied from an outside source is that which is represented by the power losses in the generator and in the motor. A motor, on the other hand, is loaded in the pumping back method by allowing it to drive a generator the electrical power developed by which helps to supply the motor. In this case also an amount of power equal to the total losses in both machines must be supplied from an outside source.

The outside power may be supplied as mechanical power delivered to the generator in addition to the power which is pumped back by the motor, or as electrical power delivered to the motor in addition to the power which is pumped back by the generator.

It may seem as though in the testing of a generator, for example, it would be proper to pump back as much power as possible by a motor to which the generator delivers its output and to supply the losses as additional mechanical power delivered directly to the generator, but in fact, it is just as satisfactory to deliver the necessary outside power as additional electrical input to the motor so that the motor may be able alone to drive the generator. The same may be said in the case in which it is the motor which is being tested, the power losses may be supplied either mechanically or electrically.

The only difference in the testing of a generator and the testing of a motor is as follows : In the testing of a generator it is generally desirable to adjust the machine to a *prescribed speed* under given conditions as to load and field excitation, and observe the terminal voltage. In the testing of a motor, on the other hand, it is generally desirable to adjust the apparatus to give a *prescribed voltage* at the terminals of the motor under given conditions as to load and field excitation and observe the motor speed. These adjustments can both be carried out in the pump-

ing back method of loading, and the one adjustment is about as easily made as the other whether the losses be supplied mechanically or electrically.

The pumping back method of loading is available for any kind of a test whatever, such as the determination of characteristic curves, tests of speed and voltage regulation, the determination of efficiency by the cradle dynamometer, or the study of heating of a machine under load, and it is a matter of indifference in all these tests whether the pumping back machine is or is not exactly like the machine which is under test, inasmuch as the test in each case applies to a particular machine, motor or generator as the case may be, and all of the measurements are made on that machine.

There is, however, a special pump-back efficiency test in which the total losses supplied to the two machines are measured, the two machines are alike and driven under conditions as nearly alike as possible (conditions as to speed, field excitation, and armature current) so that half of the total losses may be assigned to each machine, and therefore, the electrical output of the generator and the electrical input to the motor being measured, the efficiency of both machines can be easily found. This is one of the best methods for measuring motor or generator efficiency under load inasmuch as it avoids the necessity of the measurement of mechanical power.

In Experiment 44 the pumping back method of loading is used, the losses are supplied mechanically, and the work is arranged with a view to the determination of the data which refer especially to the operation of a machine as a generator.

In Experiment 45 the pumping back method of loading is used, the losses are supplied electrically, and the work is arranged with a view to the determination of the data which refer especially to the operation of a machine as a motor.

In both Experiments 44 and 45 two similar dynamos are used so that the pump-back efficiency test may be performed, and in this case of course the results apply to both machines.

Experiment 44.

When the losses are supplied mechanically to a pumping back set any source of mechanical power may be used. It is most convenient however to supply the mechanical power by a small auxiliary shunt motor, for in this case the speed may be easily controlled and the amount of mechanical power delivered may be easily determined by subtracting the stray power and $R_a I_a^2$ losses in the motor from the observed power delivered to the motor armature, the stray power loss in the motor at the given speed and field excitation being determined by a separate set of measurements.

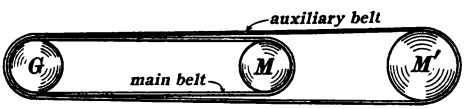

Fig. 37*a*.

A convenient arrangement for loading two machines by the pumping back method and supplying the losses mechanically is shown in Fig. 37. The mechanical connections are shown in Fig. 37*a* and the electrical connections are shown in Fig. 37*b*.

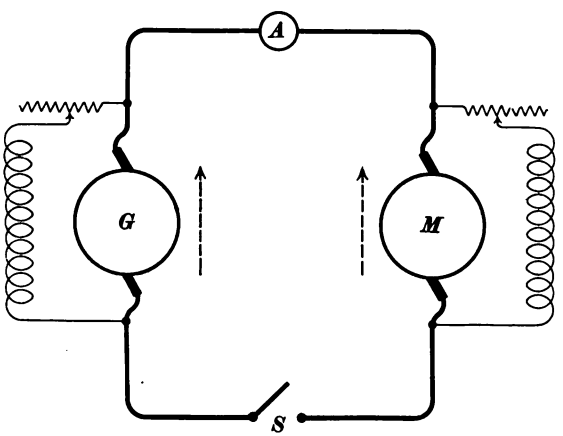

Fig. 37*b*.

The two machines involved in the pump-back test are the generator, *G*, and the motor, *M*, which are belted together as

shown in Fig. 37*a*. The auxiliary motor, *M'*, for supplying the losses has a large pulley and it is belted to the generator by a belt which runs over the main belt. If the auxiliary motor has a small pulley the auxiliary belt may be spread by an idle pulley, or *M'* may be placed between *G* and *M* and the main belt run over the auxiliary belt.

The electrical connections shown in Fig. 37*b* do not include the connections of the auxiliary motor, *M'*. The two machines involved in the pump back test are connected so that their voltages oppose each other as shown by the dotted arrows, and after the machines are brought up to speed by means of the auxiliary motor, *M'*, the field excitation of the machine, *G*, which is to act as generator is slightly strengthened and the field of the machine, *M*, which is to act as motor, is slightly weakened until the full-load current flows as indicated by the ammeter, *A*.

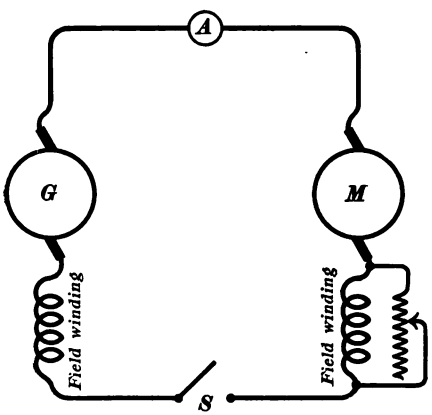

Fig. 37*c*.

In applying the pumping back method to two series dynamos the driving motor is arranged as shown in Fig. 37*a* and the electrical connections of the two series machines are arranged as shown in Fig. 37*c*, an adjustable shunt being connected across the field winding of the machine, *M*, which is to act as a motor so that the field excitation of this machine may be reduced for the purpose of controlling the current. The directions given below apply to two shunt or compound machines.

Apparatus. — Two similar shunt dynamos, *G* and *M*, are connected electrically and mechanically as shown in Fig. 37. If *G* and *M* are compound dynamos be sure that the series field wind-

ings of both are so connected as to strengthen their fields when current flows, that is the series field winding of the machine, *M*, is to be arranged for cumulative compounding. An auxiliary shunt motor, *M'*, large enough to supply the losses in *G* and *M* at full load, is belted to the generator as shown in Fig 37*a*. This driving motor has a field rheostat for controlling its speed and a suitable ammeter is connected so as to measure the current delivered to its armature. A suitable voltmeter, not shown in Fig. 37, is arranged with long flexible leads with terminals that can be connected for measuring the voltage across the armature of the driving motor, the voltage across the terminals of *G* or the voltage across the terminals of *M*.

Work to be done. — 1. With the switch, *S*, Fig. 37*b*, open, bring the two machines, *G* and *M*, up to full speed by means of the auxiliary driving motor, and see that the machines, *G* and *M*, both build up. Then connect the voltmeter across the open switch, adjust the field rheostat of *G* or *M* until the voltmeter reading is zero, and then close the switch, *S'*.

2. *Observations for voltage regulation of machine, G.* — (*a*) Adjust the field rheostats of both machines, *G* and *M*, until nearly normal terminal voltage of *G* and nearly full-load current are obtained, adjust the field rheostat of the driving motor to give nearly normal speed, then adjust the terminal voltage of *G* and its current output accurately to the normal full-load values, and, lastly, adjust the speed accurately to full-load value. Under these conditions observe terminal voltage, current output, and speed of *G*. *

(*b*) Open the switch, *S*, bringing *G* to normal speed and, without having touched the field rheostat of *G*, observe its speed and terminal voltage.

3. *Observations for efficiency of G and M at full load.* — (*a*) Repeat the adjustments of 2*a* and observe current output of *G*,

* This adjustment is to be repeated under 3*a* and time may be saved by making the necessary additional observations required under 3*a* before proceeding to 2*b*.

terminal voltage of G, terminal voltage of M, speed of G or M, armature current of M' and voltage across armature of M'. Measuring terminal voltage of both G and M enables one to be sure that the resistance of the connecting wires is negligible.

(*b*) Disconnect M' (mechanically) and observe its armature current and armature voltage at no-load in order to determine its stray power loss.

(*c*) Measure the armature resistance of the driving motor by a suitable method.

Report. — 1. Calculate the voltage regulation of the generator, G, in per cent.

2. Calculate the efficiency at full load of the generator, G, and of the motor, M. In making this calculation assume that the power delivered by M' is lost, half in G and half in M, the connecting wires being of negligible resistance.

3. State in detail the differences in conditions of operation of G and M, under *3* above which make for differences of internal losses in the two.

Note. — The efficiency at full load of G and of M, as here determined, is more accurate than the efficiency determined by the stray power method outlined in Experiment 15, because in the method of Experiment 15 the stray power loss is determined at zero load and the stray power loss at full load is assumed to be the same as the stray power loss at zero load with the same value of E_a. It is interesting therefore to compare the efficiency here determined with its value for the same machine as calculated from the data of Experiment 15.

Experiment 45.

Either one of two methods may be used for supplying the losses electrically in the pumping back method. One of these methods is shown in Fig. 38 and the other is shown in Fig. 39. The belt connection is omitted from both figures for the sake of

clearness and the diagrams are given for the case of shunt machines.

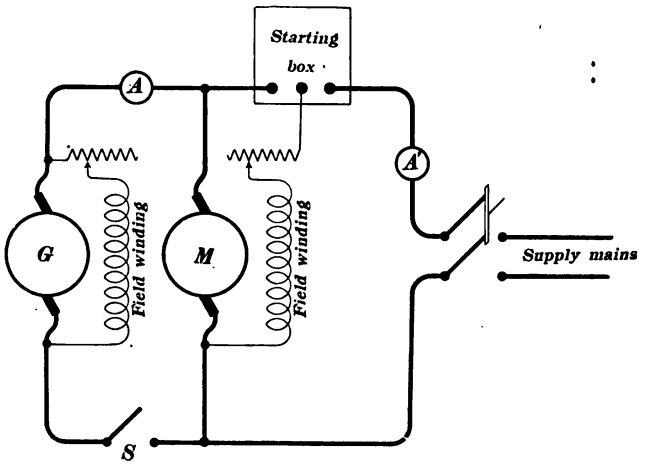

Fig. 38.

In Fig. 38 current, measured by the ammeter, A', is delivered to the motor terminals and of course in this case the total current delivered to the motor exceeds the current output of the generator and the counter electromotive force of the motor must be less than the voltage of the generator, G.

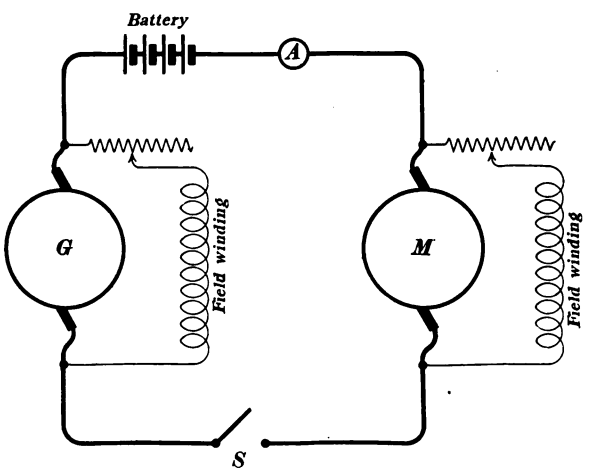

Fig. 39.

In Fig. 39 a battery (or a booster) is connected in the circuit of the two machines. In this case the total current delivered to the motor is the same as the current output of the generator and the counter electromotive force of the motor must exceed the voltage of the generator, *G*.

The experiment as here outlined is based on the connections shown in Fig. 38 and two shunt dynamos or if desired two compound dynamos are supposed to be used.

Apparatus. — Two similar dynamos, *G* and *M*, are belted together and connected electrically as shown in Fig. 38. If compound dynamos are used the motor must be arranged for cumulative compounding. A suitable voltmeter, not shown in the figure, is to be provided with long flexible leads so that it can be connected at will to measure the voltage across the open switch, *S*, or the voltage across the terminals of *G*, or across the supply mains.

If the voltage across the supply mains is greater than the terminal voltage at which it is desired to operate the two machines, *G* and *M*, a rheostat of moderate carrying capacity must be inserted so that the total current delivered to *M* from the supply mains may flow through it.

Work to be done. — *1.* With the switch, *S*, open start the motor and bring both machines, *G* and *M*, up to full speed. Then connect the voltmeter across the open switch, *S*, adjust the field rheostat of *G* until the voltmeter reading is zero and then close the switch, *S*.

2. Observations for speed regulation of the motor. — (*a*) Adjust the field rheostat of *G* until the motor is at full load, as indicated by the total current delivered to it, with normal voltage between its brushes, and normal speed excitation. If there is a rheostat inserted in one of the supply mains for reducing the supply voltage to the value desired across the motor terminals, this adjustment of the motor to full load with normal voltage across terminals will require the simultaneous adjustment of both rheostats and of the rheostat which is connected in one of

the supply mains, in a manner somewhat similar to the adjustment described under 2*a* of Experiment 44.

Under these conditions observe motor speed, total input of current to motor, and voltage across motor terminals.*

(*b*) Open the switch, throw off the belt, and bring the motor up to speed at zero load with normal field excitation and normal voltage across its terminals, and observe its terminal voltage and speed.

3. *Observations for efficiency of G and M at full load.* — (*a*) Repeat the adjustments of 2*a* and observe current output of *G*, terminal voltage of *G*, terminal voltage of *M*, speed of *G* or *M*, and current received from the supply mains. This latter current multiplied by the terminal voltage of the motor gives the power received from the supply mains. Measuring terminal voltage of both *G* and *M* enables one to be sure that the resistance of the connecting wires is negligible.

Report. — 1. Calculate the speed regulation of the motor, *M*, in per cent.

2. Calculate the efficiency at full load of the generator, *G*, and of the motor, *M*. In making this calculation assume that the power received from the supply mains is lost, half in *G* and half in *M*.

3. State in detail the differences in conditions of operation of *G* and *M* under 3 above which make for differences of internal losses in the two machines.

See note at the end of Experiment 44.

Experiment 46.

LOADING OF TWO SIMILAR SERIES MACHINES.

The two preceding experiments have dealt with the methods of loading shunt and compound machines by the pumping back method. The object of this experiment is to apply the same general method to two similar series dynamos.

* This adjustment is to be repeated under 3*a*, and time may be saved by making the additional observations required under 3*a* before proceeding to 2*b*.

Apparatus. — The arrangement to be used is that shown in a general way for shunt machines in Fig. 39. The arrangement for the present case is shown in Fig. 40.

Two similar series dynamos, two street-car motors for example, are belted or coupled together and connected as shown in Fig. 40. The armature of a booster is included in the circuit, this

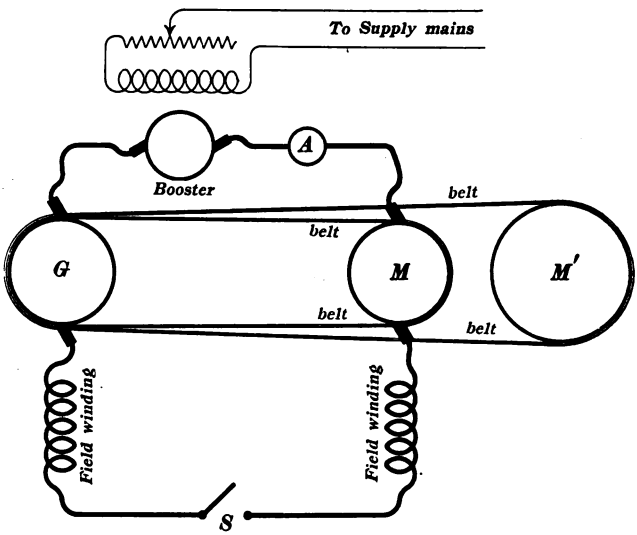

Fig. 40.

booster is driven from an outside source of power, its field is excited from supply mains, and its field rheostat has a very wide range of adjustment so that the voltage across the armature terminals of the booster may be adjusted to any desired value. The current rating of the booster must be at least equal to the current rating of the machines, *G* and *M*, under test. The booster may of course be an ordinary shunt machine.

A suitable voltmeter, not shown in Fig. 40, is arranged with long flexible leads for measuring any voltage in the system at ll, and an ammeter is arranged to measure the armature cur- of the auxiliary motor, *M'*.

The auxiliary motor, M', is provided with a starting box and with a field rheostat for controlling its speed.

The booster is necessary to cause any desired amount of current to flow through the circuit inasmuch as the two similar machines, G and M, have equal and opposite voltages. Furthermore the two machines, G and M, develop equal and opposite torques and an auxiliary motor, M', arranged as in Fig. 37*a* is required to cause G and M to rotate at any desired speed.

The arrangement shown in Fig. 40 could be simplified by arranging an adjustable shunt across the field terminals of the machine, M, in which case the booster alone or the auxiliary motor, M', alone is sufficient to enable one to control both speed and current. The great advantage of the arrangement shown in Fig. 40, however, is that the booster supplies all of the RI^2 losses in the two machines and the auxiliary motor, M', supplies the stray power losses, namely, friction, windage, eddy current, and hysteresis losses. A further advantage of the arrangement of Fig. 40 is that the machines, G and M, operate at the same degree of field excitation so that the losses are very nearly the same in both machines.

A booster and an auxiliary driving motor can be used jointly, with all of the above advantages, in the testing of shunt or compound machines; and the method of supplying the losses by delivering current at the terminals of M as shown in Fig. 38 can be used in the testing of series machines.

Work to be done. — The object of the experiment is to determine data for the speed, torque, and efficiency curves of one of the machines acting as a motor with normal voltage across its terminals. It is therefore, desirable to bring the voltage across the terminals of M to the normal value before each set of readings is taken.

1. (*a*) Close the switch, S, and start the motor, M', cautiously. If the apparatus speeds up and then suddenly drops in speed stop the motor, M', quickly. Both machines, G and M, tend to operate as generators and the field winding of M must be reversed.

(*b*) Close the switch, *S*, start the motor, *M'*, and bring the machines, *G* and *M*, up to speed. Then start up the booster and increase its field excitation cautiously. If this causes the speeds of *G* and *M* to increase it shows that both *G* and *M* tend to operate as motors and the field winding of *G* must be reversed.

(*c*) Having made the trials (*a*) and (*b*) and having altered the connections accordingly, one may still not know which of the machines, *G* or *M*, will operate as a motor and which as a generator; but this will appear at once when the voltmeter readings are taken across *G* and across *M*. The higher voltage machine will be the motor.

(*d*) The apparatus is now properly arranged and the machine, *M*, identified. Start the motor, *M'*, and bring *G* and *M* up to speed. Then start the booster with its field excitation nearly at zero, close the switch, *S*, and adjust booster voltage and motor speed alternately until the desired current circulates through *G* and *M* with normal voltage across the terminals of *M*.

2. Take sets of simultaneous readings of the following quantities for a series of values of current through *G* and *M* and with normal voltage across *M*, ranging from full-load current or perhaps from a current 25 per cent. in excess of full-load current, to the smallest current that will give normal voltage across *M* without excessive speed:

Voltage across booster terminals.
Voltage across terminals of *M*.
Voltage across terminals of *G*.
Voltage across armature terminals of *M'*.
Current flowing through *G* and *M*.
Current flowing through the armature of *M'*.
Speed of *M* and
Speed of *M'*.

3. Stop the machines, throw the belt off the auxiliary motor, *M'*, start this motor without load, adjust the field rheostat of *M'* to bring it in succession to the various speeds at which it was observed to run under (2) above, and for each speed observe:

Speed of M'.

Armature current of M'.

Voltage across armature terminals of M'.

4. Measure the armature resistance of M' by any suitable method.

Report. — 1. Calculate the efficiency of the motor, M, for each value of current through it.

2. Calculate the torque developed at the pulley of M for each value of the current through it.

3. Plot speed, torque and efficiency curves of the motor, M, using amperes in M as abscissas.

Experiment 47.

THE HEAT RUN.

The object of this experiment is to determine whether a machine will operate at its rated full load without overheating, and in general to study the rise of temperature of the various parts of a machine.

The rise of temperature of a machine above the temperature of the air should not exceed a certain prescribed amount when the machine is operated at full load indefinitely.

In machines intended for intermittent service like street car motors and crane motors it is usual to set a limit to the rise of temperature after full-load operation for a specified time, not for an indefinitely long time. Thus a street railway motor is generally required by the purchaser's specifications to carry full load for one hour without rising more than 75°C. above the temperature of the air.

The thermal characteristic. — The thermal characteristic of a motor (it is generally taken for railway motors) is the curve of which the abscissas show the values of current delivered to the motor and the ordinates show, for each value of the current, how long the motor can operate before rising from air temperature to the specified limiting temperature of 75°C. above the air.

Dependence of temperature rise upon the temperature of the air.— A current which will raise a winding of wire to a temperature of 50°C. above the air at 20°C. will produce a rise of about 52°C. or 53°C. above the air if the air temperature is 30°C. instead of 20°C. This is due to the fact that in the latter case, air and coil temperatures both being higher, the resistance of the coil is greater and therefore the rise of temperature is greater. The accepted standard air temperature to be used in heating tests of machines is 25°C. and an observed temperature rise is about ½ per cent. too large for every degree that the air temperature is in excess of 25°C. or ½ per cent. too small for every degree that the air temperature is less than 25°C., and observed rises of temperature are to be corrected for air temperatures accordingly. Thus if a machine is observed to rise 52.5 degrees above the air at 30°C. we should subtract 2½ per cent. from 52.5 leaving about 51.2 degrees as the rise of temperature above the air at 25°C.

Apparatus. — The following experiment applies to a shunt or compound generator. Arrangements are made for driving the machine at full load for several hours and for observing speed, terminal voltage, and current output at intervals during the test. The object being to operate the generator under normal full-load conditions, it is not important to observe anything, such as field current, which does not have immediate reference to the practical conditions of operation.

Arrangements must be made for quick measurements of the resistance of armature, shunt field, and series field windings; and several thermometers, one for each part of the machine where temperature is to be observed, are fixed in position. The bulb of each thermometer should be pressed flat against the machine part and a small wad of clean cotton be pressed against the thermometer bulb to hold it in position and to shield it from the ool air.

Work to be done. — 1. Shield the machine to be tested from of air and observe the temperatures of its various parts and e temperature of the air. The temperature of the air should

be read from two or three thermometers placed at different points near the machine.

2. Measure the resistance of the shunt and series field windings, and of the armature (between commutator bars, not between brushes).

3. Start the machine, bring it up to its normal speed, adjust its receiving circuit to take full-load current and its field rheostat to give normal full-load terminal voltage.

4. Run the machine for several hours, or until there is no further rise of temperature, adjust the field rheostat and if necessary the receiving circuit at intervals to keep the machine at full load with normal full-load terminal voltage, and at intervals of every half hour observe speed, terminal voltage, and current output, and read thermometers placed as follows: (*a*) Two or three thermometers to show air temperature, (*b*) a thermometer placed against the series field coil, (*c*) a thermometer placed against the shunt field coil, (*d*) a thermometer placed against the field magnet yoke, (*e*) and (*f*) thermometers placed against leading and trailing pole tips, and (*g*) a thermometer placed against the bearing at the pulley end of the machine.

5. When the maximum temperatures are reached stop the machine, take steps immediately for measuring the resistance of shunt and series field windings, and of armature winding, and quickly place thermometers, properly shielded, against the armature core, against the armature winding, and in one of the armature ventilating ducts. Read all of these thermometers at short intervals until their maximum readings are reached which are to be recorded.

Report. — 1. Plot a set of curves of which the abscissas represent elapsed time after the beginning of the test and of which the ordinates represent the temperatures observed during the progress of the test.

2. Calculate the rise of temperature of each winding from the observed room temperature, basing this calculation upon the

measured resistances cold and hot of the respective windings. In this calculation use 0.0042 as the temperature coefficient per degree centigrade.

3. Compare the ultimate rise of temperature of each winding as indicated by thermometer with the rise of temperature of the same winding as calculated under (2).

Experiment 48.

ELECTRIC RAILWAY AND CAR TEST.

The object of this experiment is to give the student an exercise in some of the simpler tests of the working conditions of an electric railway including especially a test of the performance of the motors on a given car.

Theory. — It is always necessary to direct a test of an installation of any kind towards the determination of certain important and dominant features of the installation; because in the first place there is no end to the minute details involved and in the second place the results of a non-discriminating test are nearly always too complex to be of any value.

Electric railway tests fall under three heads: (*a*) The test of the station, (*b*) The test of the line or transmission system, and (*c*) The test of the motors and car equipments.

The features to which a station test is usually directed are coal and water consumption, power output, and voltage regulation. A general insight into the question of coal and water consumption depends upon a knowledge of the temperature of the feed water, the temperature and composition of the flue gases, a record of steam pressure, and the details of operation of the engines as hown by the steam engine indicator; and a general insight into : question of the generation of electric power depends upon a owledge of the net power delivered by the engines and a ord of bus-bar voltage and current output during the test.

he most important feature of a line test refers to the variation oltage at different points of the line during the regular car

service. A knowledge of these variations has a bearing upon the question as to the proper distribution of the line copper and as to whether the use of a greater amount of copper might be warranted, and also upon the conditions of operation of the motors. Thus, if the voltage is too low on a portion of the line, the car speed on that portion will be necessarily reduced, and the motors will be in operation for a longer time on each run with perhaps less time to cool off between runs.

The most important features of the motor service are: (1) The question of schedule speed, (2) the question of energy consumption per car mile or per ton mile, and (3) the question of heating of the motors.

Line test. — The line test which it is intended to make in this experiment is, simply, the observation of the voltage between trolley and rail during the time of heavy traffic, at different points along the line, by a voltmeter placed on a regular car. It is important that the test be made during the regular operation of the system and at that time of day when the traffic is heavy. A simultaneous record of the station voltage should be kept.

A very sudden drop of voltage as a car is traveling along may indicate a section of track that is very poorly bonded to the portions of the track further ahead or behind the car.

Car test. — The car test which it is here intended to make is to determine the following: (*a*) The total consumption of energy on a regular run, (*b*) the record of speed during a run, (*c*) the average value of the square of the current flowing through the motor or motors, and (*d*) the temperature of the various parts of a motor immediately before and immediately after a typical run.

(*a*) The total consumption of energy can be best determined by means of a special high speed watt-hour meter with the total current from the trolley arm flowing through its current coil, and with its voltage coil connected from trolley to rail, that is from the trolley to the car truck.

(*b*) The car speed may best be indicated by a tachometer belted to a car axle, or by a voltmeter which is connected to the

terminals of a small magneto-generator, this generator being belted to a car axle. The record of speed should include a reading of the tachometer at intervals of say 30 seconds and especially it should include the clock time of every stop and start.

(*c*) The average value of the square of the current is of course the quantity which when multiplied by a resistance through which the current flows and by the duration of the run in seconds gives the energy in watt-seconds or joules developed in the resistance. Therefore the average value of the square of the current in one of the motors during a run may be found by dividing the energy delivered during the run to any resistance through which the current flows, by the value of the resistance in ohms and by the duration of the run in seconds, the delivered energy being expressed in watt-seconds. The average value of the square of the current is usually specified by giving its square root, which is of course expressed in amperes.

The energy delivered to a resistance, to the field winding of one of the motors for example, may be measured by a suitable watt-hour meter, or, a special German silver resistance of very low value may be connected in the motor circuit and the energy delivered to this German silver resistance may be measured by submerging it in a vessel of oil, an oil calorimeter, and observing the rise of temperature of the oil during the run.

This oil calorimeter should consist of a tin pail well jacketed by a larger tin pail and this larger tin pail should be placed in a wooden box and surrounded with cotton. A closely fitting wooden lid should cover both pails, the copper rods between which the German silver resistance is connected may be rigidly fastened to this wooden lid, and flexible leads may be soldered to se rods. A wooden handle should pass through the lid to a ıg device and a hole should be made in the lid for a sensi- ermometer.

value of the German silver resistance and the amount of ɔe used should be calculated from the estimated duration

of the intended run and the estimated mean square of the current so that a rise of temperature of from 10 to 15 degrees centigrade may be produced during the run, and at the beginning of the run the oil should be cooled from 5 to 7½ degrees below air temperature.

The factor by which the rise in temperature of the calorimeter is to be multiplied to give energy in watt-seconds may best be determined in the laboratory by causing a known constant current, I, to flow through the German silver resistance for t seconds, the voltage, E, across the German silver resistance being measured and the rise of temperature, $\theta°$, centigrade, being observed; then the required factor is RI^2t/θ. In this test the current, I, should be nearly equal to the square root of the mean square of the motor current to be measured on the car, the time, t, should be about the duration of the run, and the calorimeter should be cooled nearly $\theta/2$ degrees below room temperature at the start of the test.

(*d*) The temperatures of the various parts of the motor at the beginning and end of a run are to be determined by a number of thermometers as described in Experiment 47.

Apparatus.—A voltmeter is to be connected from trolley arm to ground on car truck or motor frame, and an ammeter is to be connected so as to measure the total current delivered to the car.

A special high speed watt-hour meter is to be connected so that the total current from the trolley flows through its current coil, and its voltage coil is to be connected from trolley arm to ground, as shown in Fig. 41.

A magneto-generator is to be mounted on the car truck and belted to the car axle and the terminals of the generator are to be connected to a low reading voltmeter.

The German silver resistance of the oil calorimeter above described is to be connected in series with one of the car motors. It is not allowable to connect this resistance in the trolley arm circuit for sometimes the whole of the current in the trolley arm

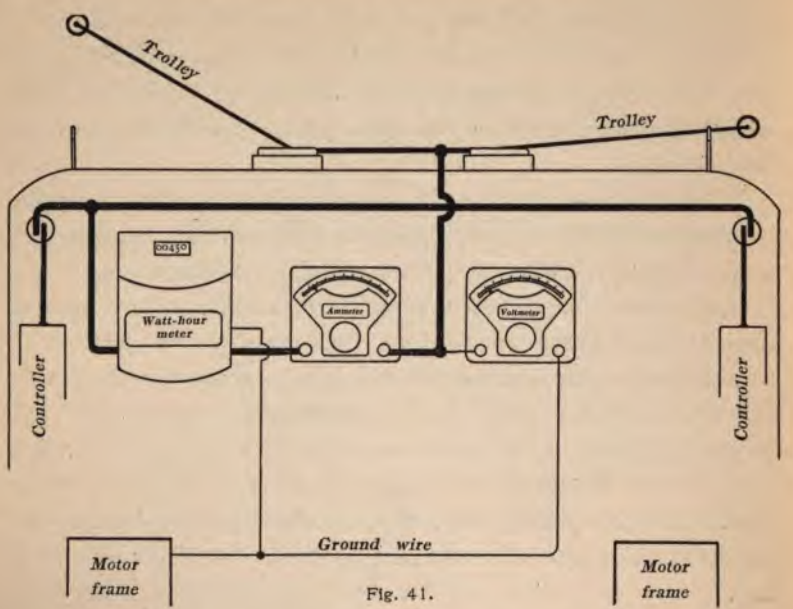

Fig. 41.

passes through both motors and sometimes the current in the trolley arm divides and half of it passes through each motor.

Thermometers and arrangements for fixing them to the motor parts are to be provided. It is especially desirable to observe the temperatures of armature winding, armature core, field winding, commutator, and bearings, so that five or six thermometers are needed.

Preparations for the test must be made on a car that can be removed from service for several hours and when everything is arranged the car should be started to see that the instruments are all in working order and properly connected; then just before the start the oil in the oil calorimeter is to be cooled by lifting out the inner pail and standing it for a short time in ice water, and the side of the pail is to be wiped dry before it is replaced in its ting vessel.

to be done.—1. Everything being in readiness read the meter and observe the temperatures of the motor parts,

the temperature of the air and the temperature of the oil calorimeter. Then during the run take the following observations:

2. With a man at each instrument and a man to call time, read main voltmeter and ammeter, and speed voltmeter at intervals of, say, 30 seconds; read the watt-hour meter, the air temperature, the calorimeter temperature, and count the number of passengers at intervals of, say, five minutes; and record the time and place of each stop and the time of each start.

3. At the end of the run take final readings of the watt-hour meter, of the temperature of calorimeter and of air, and apply the thermometers as quickly as possible to the motor parts and watch them till they reach their maximum readings which are to be recorded.

4. Ascertain the weight of the car and its equipment, and the length of the run in miles.

5. Calibrate the calorimeter.

6. A record of the station voltage should be kept during the car and line test.

Report. — 1. Discuss briefly the question of voltage drop on the line and especially state the location along the line where the minimum voltage occurs and specify the voltage drop from the power station to this point.

2. Determine the kilowatt-hours of energy consumed per car mile and per ton mile.

3. Calculate from the calorimeter readings the square-root-of-mean-square of current in a motor during the run, and if a thermal characteristic (see Experiment 47) of the car motors is available find how long the car could continue to run under the conditions obtaining during the given run without overheating.

4. From the observed temperature rise of the motor parts state whether the motor is being used under easy or severe conditions of service.

5. Determine the schedule speed of the car and the average running speed for the given run.

APR 10 1939